P:\3017 (Prov Firefighters Realty)\3017-03 (92 Printery St Prov)\dwg\3017-03_SIGN_LAYOUT_RADIUS.dwg 9/16/2010 2:13:00 PM EDT

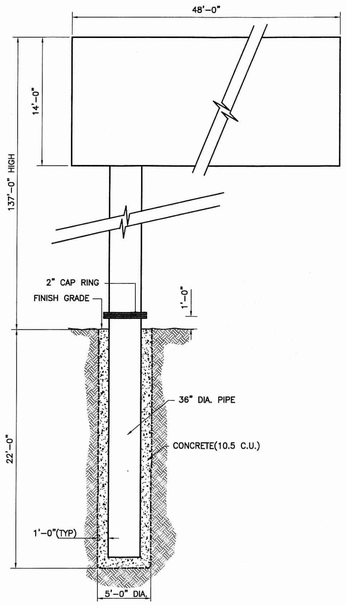

CAISSON FOOTING DETAIL
SCALE: 1/8"=1'-0"

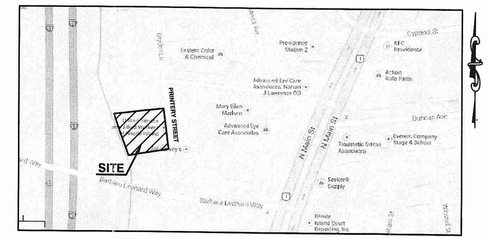

LOCATION MAP
N.T.S.

GRAPHIC SCALE

30 0 15 30 60 120

(IN FEET)
1 inch = 30 ft.

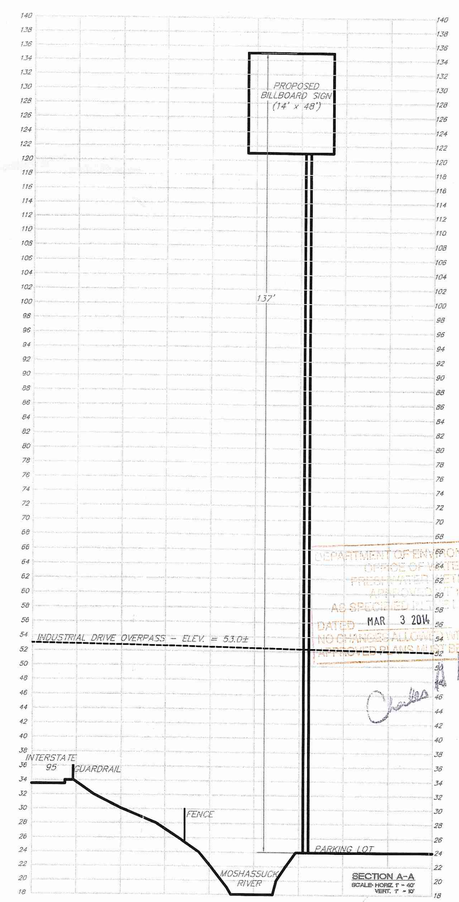

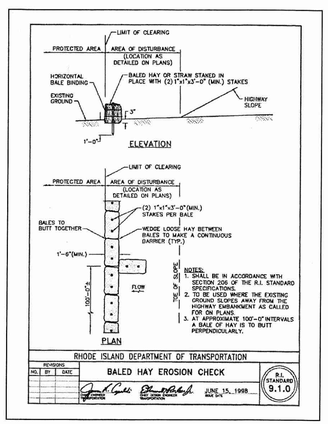

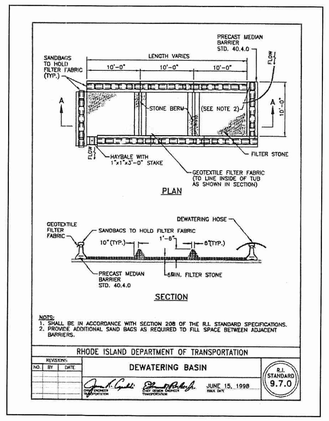

REFERENCES:

FOR PROPERTY LINE AND EASEMENT SEE PLAN ENTITLED, "LAND WITHIN EAST SIDE PROJECT, R.I., R-4. BELONGING TO THE PROVIDENCE REDEVELOPMENT AGENCY, SCALE 1"=40', JUNE 1976", RECORDED IN BOOK 1194, PAGE 303.

CITY OF PROVIDENCE RI PLAT 2

CITY OF PROVIDENCE OFFICIAL ZONING MAP – OVERLAY ZONING DISTRICT, ZONING PANEL: 10

THE DEPARTMENT OF PLANNING AND DEVELOPMENT, CITY OF PROVIDENCE – HTTP://WWW.PROVIDENCEPLANNING.ORG, RESOURCE LIBRARY, GIS DATA.

FLOOD NOTE:

THIS SITE IS LOCATED IN A ZONE 'AE' (BASE FLOOD ELEVATIONS DETERMINED) PER FEDERAL EMERGENCY MANAGEMENT AGENCY (FEMA), FLOOD INSURANCE RATE MAP (FIRM), PROVIDENCE COUNTY, RHODE ISLAND, PANEL 308 OF 451, MAP NUMBER 44007C0308G, EFFECTIVE DATE MARCH 2, 2009.

ELEVATION REFERENCE MARK RM 2-15, ELEVATION IN FEET 22.80 (NGVD 1929), TOP OF GRANITE CURB AT NORTHEAST CORNER OF PRINTERY STREET AT INDUSTRIAL DRIVE OVERPAST.

CATALDO ASSOCIATES INC.
CIVIL ENGINEERS
LAND SURVEYORS

1408 ATWOOD AVENUE
JOHNSTON, RI 02919

(401) 453-3300
FAX: (401) 453-4117
ca@cataldoeng.com

Project:

PROPOSED PYLON SIGN

**92 & 96 PRINTERY ST.
PROVIDENCE
RHODE ISLAND**

Prepared For:

PROVIDENCE FIREFIGHTERS REALTY CORP.

**92 PRINTERY STREET
PROVIDENCE
RHODE ISLAND**

RALPH A. CATALDO
No. 3330
REGISTERED PROFESSIONAL ENGINEER
12/23/13

Issue Date: DECEMBER 23, 2013

Revisions

No.	Date	Description

DEPARTMENT OF ENVIRONMENTAL MANAGEMENT
OFFICE OF WATER RESOURCES
FREESHWATER WETLANDS PROGRAM
APPROVED WITH CONDITIONS
AS SPECIFIED IN A LETTER OF APPROVAL
DATED MAR 3 2014 FILE 14-0022
NO CHANGES ALLOWED WITHOUT WRITTEN APPROVAL
FROM THE DEPARTMENT OF ENVIRONMENTAL MANAGEMENT

Project Number: 3017-03

Scale: 1" = 30'

Designed By: N/A

Drawn By: F.L.R. Checked By: R.A.C.

Sheet Title:

SITE PLAN

FEB - 3 2014

C1

Sheet Number: 1 of 1