BOTTOMLESS SAND FILTER NOT TO SCALE

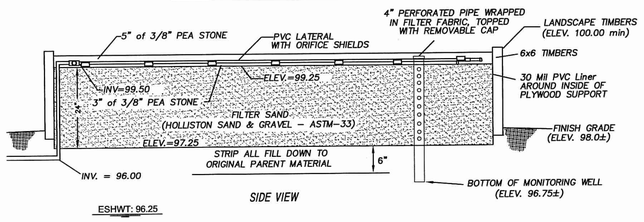

SIDE VIEW

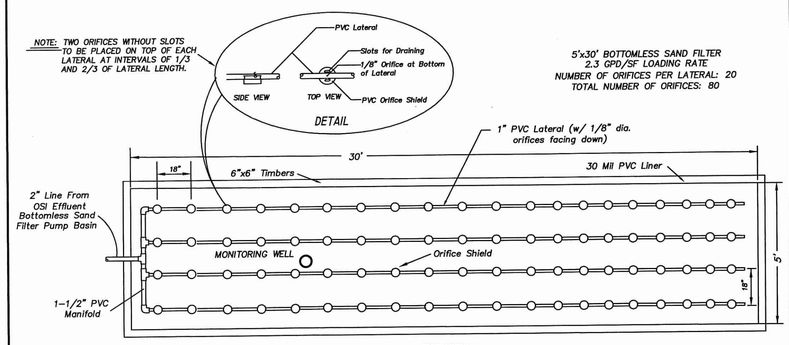

TOP VIEW

24" DIA. BOTTOMLESS SAND FILTER PUMP BASIN WITH EFFLUENT PUMP ASSEMBLY NOT TO SCALE

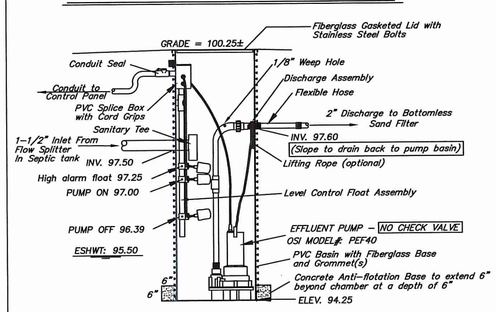

SIDE VIEW

SYSTEM COMPONANTS

1. 1,500 GALLON 2-COMPARTMENT CONCRETE SEPTIC TANK WITH PUMP VAULT AND RECIRCULATING SPLITTER VALVE AND W/OSIP3005 (6 STAGE) PUMP TANK.
2. 6' DEEP - 24" DIAMETER PUMP BASIN.
3. AX-20 ADVANTEX TEXTILE FILTER.
4. 30' LONG x 5' WIDE BOTTOMLESS SANDFILTER
5. ORENCO SYSTEMS, INC. CONTROL PANEL.

TEST HOLE DATA

DATE: 5-21-15

TH 1
0"-6" A, SL, 5YR 2.5/1
6"-28" Bw, SL, 10YR 4/6
28"-40" C, FS, 5YR 6/2
40"-72" C2, CB, G, LCOS, 5YR 5/2
72"-100" C3, SL, 5YR 5/2
ESHWT: 18"
NO LEDGE AT: 100"
SOIL CATEGORY: 6

TH 2
0"-6" A, SL, 5YR 2.5/1
6"-20" Bw, SL, 10YR 4/6
20"-42" C, FS, 5YR 6/2
42"-78" C2, CB, G, LCOS, 5YR 5/2
78"-98" C3, SL, 5YR 5/2
ESHWT: 18"
NO LEDGE AT: 98"

LEGEND

100 ---------- 100	EXISTING CONTOURS
100	PROPOSED CONTOURS
TH1	TEST HOLE
A6	WETLAND FLAG
	STAKED HAYBALES OR SILT FENCE AND LIMIT OF DISTURBANCE

RECIRCULATING EFFLUENT PUMP SYSTEM (REPS)

(2 COMPARTMENT 1,500 GALLON SEPTIC TANK
AX 20 ADVANTEX TEXTILE FILTER)

NOT TO SCALE

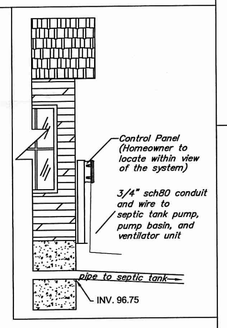

AdvanTex™ Treatment System

AX 20 Series - Mode 3b

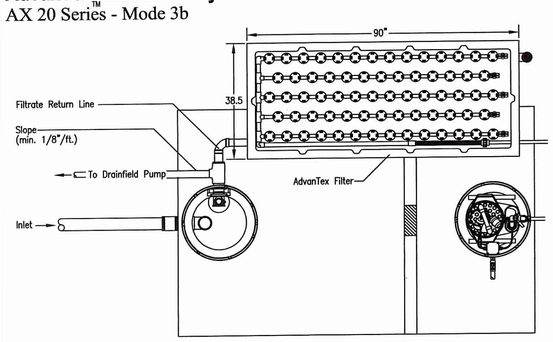

Top View

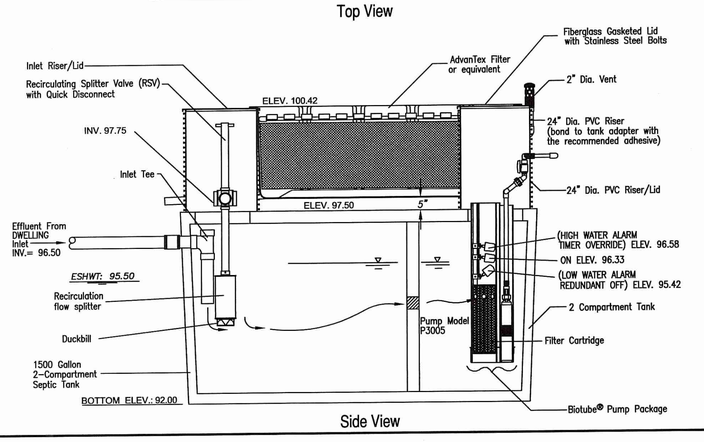

Side View

BUOYANCY CALCULATIONS

ESHWT: ELEV. 95.50
BOTTOM OF TANK: ELEV. 92.00
BUOYANCY FORCE: 10,920 lbs±
SEPTIC TANK WEIGHT: 12,100 lbs.±
ADVANTEX WEIGHT: 600 lbs.±
TOTAL COMBINED WEIGHT: 12,700 lbs±
(NEGLECTS ADDITIONAL WEIGHT OF SOIL)
STABILIZING NOT REQUIRED

OWTS NOTES

1) SYSTEM INSTALLATION TO BE SUPERVISED BY THE DESIGNER.
2) ALL TREES AND/OR STUMPS WITHIN 10 FEET OF PROPOSED SYSTEM TO BE CLEARED.
3) NO WELL EXISTS WITHIN 100' OF THE PROPOSED LEACHING SYSTEM.
4) 5 FEET FROM SAND FILTER NOT TO BE LOWER THAN ELEVATION 354.00.
5) ANY PRIVATE WELLS, EXISTING & PROPOSED, WITHIN 200' OF ISDS ARE SHOWN.
6) ANY PUBLIC WELLS, EXISTING AND PROPOSED, WITHIN 500' OF ISDS ARE SHOWN.
7) SEPTIC TANK TO BE A MINIMUM OF 75' FROM ALL WELLS.
8) NO DRAINS OF ANY KIND SHALL BE WITHIN 25' UPGRADIENT OR 50' DOWNGRADIENT OR SIDE GRADIENT OF THE PROPOSED LEACHING SYSTEM.
9) ALL SOIL AT LEAST 6"± BELOW EXISTING GRADE AT BOTTOMLESS SAND FILTER SHALL BE STRIPPED AND BACKFILLED WITH FILTER SAND.
10) THE SEPTIC TANK SHALL BE A WATERTIGHT, 1,500 GALLON 2-COMPARTMENT TANK WITH 24" DIAMETER INLET AND OUTLET ACCESS RISERS. RISERS SHALL BE PVC WITH SECURE FIBERGLASS LIDS. IF CONCRETE TANK IS USED, ABS TANK ADAPTER SHALL BE CAST IN PLACE. TANK SHALL BE VACUUM TESTED WHEN CONSTRUCTED (W/CERTIFICATE) OR WATER TESTED/VACUUM TESTED ON SITE PRIOR TO ACCEPTANCE FROM THE ENGINEER.
11) THE ADVANTEX-AX TREATMENT SYSTEM CONTAINS A PACKED BED FILTER THAT USES SPECIALLY DESIGNED TEXTILE MATERIALS WITHIN A PRE-ASSEMBLED FILTER UNIT.
12) ALL PUMPS SHALL BE EQUIPPED WITH A HIGH WATER LEVEL VISABLE AND AUDIBLE ALARM POWERED BY A CIRCUIT SEPERATE FROM THE PUMP POWER. THE ALARM SHALL BE LOCATED IN A NORMALLY OCCUPIED AREA OF THE DWELLING OR SHALL BE INSTALLED AT A LOCATION TO BE DESIGNATED BY THE HOMEOWNER.
13) THE SEPTIC TANK SHALL BE PROVIDED WITH A PVC INLET TEE AND SCREENING PUMP VAULT IN THE OUTLET END. AN ACCESS RISER SHALL BE INSTALLED DIRECTLY ABOVE THE SCREENED PUMP VAULT AND INLET TEE.
14) BOTTOMLESS SAND FILTER MEDIA: HOLLISTON SAND & GRAVEL ASTM-33 SAND. LESS THAN 1% PASSING THE SIEVE WITH AN EFFECTIVE SIZE OF .25mm-.45mm AND WITH A UNIFORMITY COEFFICIENT OF 2.0±.
15) IF CONTRACTOR ENCOUNTERS ANY CONDITIONS DURING CONSTRUCTION WHICH INDICATE THE SYSTEM CANNOT BE INSTALLED IN ACCORDANCE WITH THE APPROVED DESIGN, OR FIND CONFLICTICTING INFORMATION ON THE PLAN, CONSTRUCTION SHALL CEASE AND DESIGNER BE NOTIFIED.
16) THE DESIGNER IS NOT RESPONSIBLE FOR ANY NEGLIGENT ACT OF OMISSION OF AN ISDS USER, INCLUDING BUT NOT LIMITED TO, FAILURE TO PROPERLY USE AND MAINTAIN THE SYSTEM, WHICH CAUSES DAMAGE TO THE SYSTEM.
17) LOCAL SUPPLIER OF OSI EQUIPMENT: ATLANTIC SOLUTIONS, 2417 EAST MAIN ROAD, PORTSMOUTH, RI 02871 TEL. (401) 293-0176
18) 5 FEET FROM SAND FILTER NOT TO BE LOWER THAN ELEVATION 97.25.

SYSTEM SIZING:

3 BEDROOMS: 115 GPD x 3 = 345 GPD
SOIL CATEGORY: 6
APPLICATION RATE: 2.3 GPD/SF
AREA REQUIRED: 345/2.3 = 150 SF
AREA PROVIDED: 5' x 30' = 150 SF

TIMER INFO:

SET ADVANTEX TIMER TO 24 DOSES/DAY
345 GPD/24 DOSES/DAY = 14.38 GAL/DOSE
14.38/35 GPM = .41 MIN.
TOTAL PUMP RUN TIME = 9.84 MIN./DAY
TOTAL PUMP OFF TIME = 1430.16 MIN./DAY
TIME OFF PER CYCLE = 59.19 MIN.
TIME ON PER CYCLE = 0.41 MIN.

DOSING RATE:

14.38 GAL/DOSE
PUMP CHAMBER CAPACITY = 23.5 GAL./FT OR 1.96 GAL./INCH
PUMP CHAMBER DEPTH @ 14.38 GAL = .61 FEET
DOSE PER ORIFICE: 345 GPD/(24 DOSES/DAY)/78 ORIFICES = .18 GAL/ORIFICE/DOSE

BUILDING SETBACKS:
(GRANDFATHERED)

FRONT: 30'
SIDE: 10'
REAR: 10'

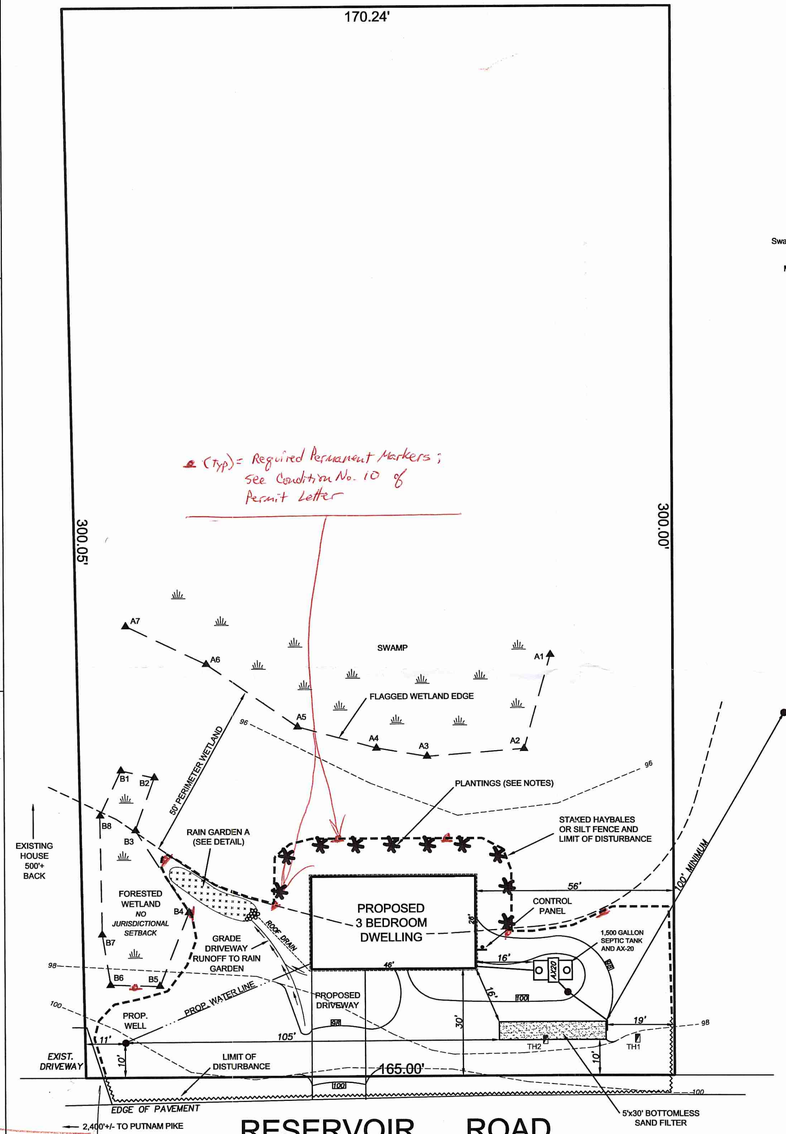

RESERVOIR ROAD

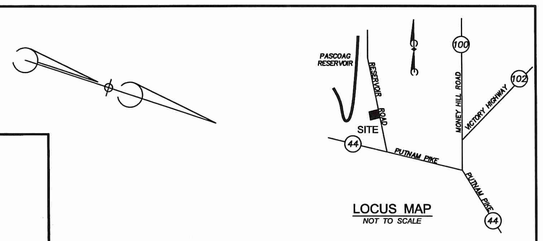

LOCUS MAP
NOT TO SCALE

RAIN GARDEN PLANTING DETAIL

NOT TO SCALE

AREA: 144 SF
36 PLANTS

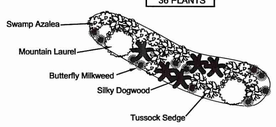

RAIN GARDEN CROSS-SECTIONL

NOT TO SCALE

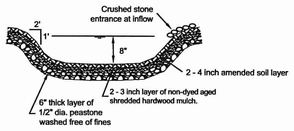

RAIN GARDEN

TREATMENT

Rain garden to be 8" deep with a 2 - 4 inch amended soil layer (50/50 mixture of the excavated native soils and mature organic compost) and a 2 - 3 inch layer of non-dyed aged shredded hardwood mulch.

CONSTRUCTION

1. A crushed stone entrance should be installed at the inflow to prevent channeling.
2. A berm to detain stormwater should be constructed along the downhill side of the rain garden, perpendicular to the slope of the lawn
3. Be sure that the soil within the rain garden area does not become compacted by construction activities (i.e. heavy machinery). If soil becomes severely compacted it may need to be tilled and amended to maintain proper

MAINTENANCE

1. The rain garden shall be inspected following at least the first two precipitation events of at least 1.0 inch to ensure that the system is functioning properly. Thereafter, the rain garden shall be monitored and maintained to assure proper functioning, plant growth and survival. Plants shall be replaced on an as-needed basis during the growing season.
2. Silt/sediment shall be removed from the rain garden when the accumulation exceeds one inch, or when water ponds on the surface of the rain garden for more than 48 hours). The top few inches of material shall be removed and shall be replaced with fresh soil mixture and mulch.
3. Pruning or replacement of woody vegetation shall occur when dead or dying vegetation is observed.
4. Soil erosion gullies shall be repaired when they occur.
5. Fertilizer or pesticides shall not be applied to plants within rain gardens.
6. Perennial plants and ground covers shall be replaced as necessary to maintain an adequate vegetated ground cover. Annual plants may also be used to maintain ground cover.

WETLANDS NOTES

1) EROSION CONTROL TO BE INSTALLED PRIOR TO START OF CONSTRUCTION. IT IS TO BE INSPECTED BY THE OWNER OR CONTRACTOR AFTER ANY RAIN EVENT AND REPAIRED OR REPLACED AS NECESSARY UNTIL CONSTRUCTION IS COMPLETE AND AREA HAS STABLIZED.

PLANTING NOTES

1) DISTURBED AREAS SHALL BE LOAMED WITH 4"-6" OF SUITABLE TOPSOIL THEN SEEDED WITH A CONSERVATION GRASS MIXTURE.
2) THE AREA SHALL BE MULCHED WITH LOOSE HAY TO RETAIN MOISTURE AND RETARD EROSION.
3) NORTHERN WHITE CEDAR SHALL BE PLANTED IN AREAS AS SHOWN. 3' HIGH; 10' O.C.
4) OWNER TO ENSURE PLANT FOR ONE FULL GROWING SEASON OR REPLANT.

DEPARTMENT OF ENVIRONMENTAL MANAGEMENT
PRESERVE WETLANDS PROGRAM
AS BUILT PLANS AND CONDITIONS
SEP 3 2015
FILE # 15-0165
DATED LETTER OF APPROVAL
NO CHANGES ALLOWED WITHOUT PRIOR APPROVAL
APPROVED PLANS MUST BE ON SITE

Environmental
JUL 24 2015

ONSITE WASTEWATER TREATMENT SYSTEM & WETLANDS PLAN FOR DONALD PEASE

ASSESSORS PLAT 10, LOT 143

RESERVOIR ROAD, GLOCESTER, RHODE ISLAND
JULY, 2015
SCALE: 1 INCH EQUALS 20 FEET

MARC N. NYBERG
No. 1797
PROFESSIONAL LAND SURVEYOR

MARC N. NYBERG ASSOCIATES, INC.
LAND SURVEYORS and PLANNERS
501 GREAT ROAD, UNIT 104
NORTH SMITHFIELD, RHODE ISLAND 02896
TEL (401) 762-2870 FAX (401) 762-2871