LOCUS MAP (NOT TO SCALE) ↑ N

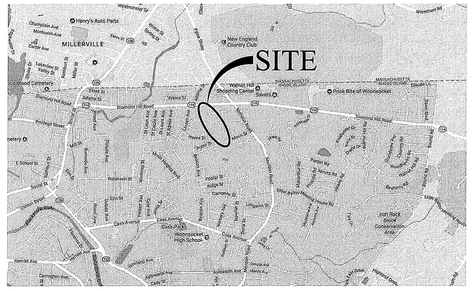

STATE WIDE MAP

MODIFIED CONSTRUCTION PLANS FOR

SAPPHIRE ESTATES

Kindly be advised that this Permit is not equivalent to a verification of the type or extent of freshwater wetlands on site.

MAJOR SUBDIVISION OF LAND

MAP B6, LOTS 38-13 & 38-524
DIAMOND HILL ROAD AND WILCOX STREET
WOONSOCKET, RHODE ISLAND

DEPARTMENT OF ENVIRONMENTAL MANAGEMENT
OFFICE OF WATER RESOURCES
FRESHWATER WETLANDS PROGRAM
APPROVED WITH CONDITIONS
AS SPECIFIED IN THE LETTER OF APPROVAL
DATED MAR 11 2019 FILE # 17-0255
NO CHANGES ALLOWED WITHOUT PRIOR APPROVAL
APPROVED PLANS MUST BE AT CONSTRUCTION SITE

PROJECT TEAM

OWNER: JOHN LAQUERRE
276 SAINT LOUIS AVE.
WOONSOCKET, RI 02895

CIVIL: D'AMICO ENGINEERING TECHNOLOGY, INC
2080 MINERAL SPRING AVE.
NORTH PROVIDENCE, RI 02911
PHONE: 401-622-1470
FAX: 401-709-0201

SURVEYOR: MARC N. NYBERG ASSOCIATES, INC
501 GREAT ROAD, UNIT 104
NORTH SMITHFIELD, RI 02896
PHONE: 401-762-2870
FAX: 401-762-2871

ZONING DISTRICT - R3

INDEX OF DRAWINGS

SHEET NO.	PLAN
1	COVER SHEET
2	GENERAL NOTES AND LEGEND
3	EXISTING CONDITIONS
4	RECORD SUBDIVISION PLAN #1
5	RECORD SUBDIVISION PLAN #2
6	RECORD PLAN OF EASEMENTS
7	SITE PLAN
8	GRADING AND DRAINAGE PLAN
9	PLAN AND PROFILE PLAN NO. 1
10	PLAN AND PROFILE PLAN NO. 2
11	SOIL EROSION AND SEDIMENT CONTROL PLAN
12	SOIL EROSION CONTROL DETAILS
13	SITE DETAILS NO. 1
14	SITE DETAILS NO. 2
15	SITE DETAILS NO. 3

WOONSOCKET PLANNING BOARD
MASTER PLAN APPROVAL: MARCH 22, 2017
PRELIMINARY PLAN APPROVAL: AUGUST 1, 2017

RIDEM - INSIGNIFICANT ALTERATION - PERMIT NO. 17-0255;
RIPDES NO. RIR 101665

RIDOT PHYSICAL ALTERATION PERMIT NO. 171010-A

REVISIONS:

NO.	DATE.	DESCRIPTION
1.	8-23-17	City Engineering Review Comments of 8-3-17
2. - 4.	12-17 to 5-19	RIDEM and RIDOT Review Comments of 11-20 -17, 11-30-17 and 5-8-18
5.	3-1-19	Roadway Profile Modification

DESIGNED BY:	DMD
CHECKED BY:	DMD
DATE:	7-1-17
PROJECT NO:	15-0001-11

SAPPHIRE ESTATES
MAJOR SUBDIVISION OF LAND PROJECT
MAP B6, LOTS 38-13 & 38-524
DIAMOND HILL ROAD AND WILCOX STREET
WOONSOCKET, RHODE ISLAND

DAVID M. D'AMICO No. 6749 REGISTERED PROFESSIONAL ENGINEER CIVIL
3/1/19

DEtec.
D'AMICO ENGINEERING TECHNOLOGY, INC.
Civil · Transportation · Land Use
2080 Mineral Spring Ave., North Providence, RI 02911
(401) 622-1470 (401) 353-1190 fax www.dengineeringtec.com

MODIFIED CONSTRUCTION PLANS

COVER PLAN

SHEET 1 OF 15

N:\D'Amico Engineering Technology, Inc\15-0001 Marc N Nyberg\11 Diamond Hill Rd Subdivision\Sapphire Estates Subdivision Construction Plans MOD 3-1-19.dwg Mar. 02, 2019 3:45pm

GENERAL NOTES:

1. THE LOCATION AND DEPTH OF EXISTING UTILITIES ARE APPROXIMATE AND HAVE BEEN PLOTTED FROM THE LATEST AVAILABLE INFORMATION. THE UTILITY LOCATIONS ARE APPROXIMATE AND MAY NOT BE ALL INCLUSIVE. THE CONTRACTOR SHALL CHECK AND VERIFY THE LOCATIONS OF ALL EXISTING UTILITIES, BOTH OVERHEAD AND UNDERGROUND, AND "DIG-SAFE" MUST BE NOTIFIED PRIOR TO COMMENCING ANY CONSTRUCTION OPERATIONS. RESTORATION AND REPAIR OF DAMAGE TO EXISTING UTILITIES SHALL BE THE RESPONSIBILITY OF THE CONTRACTOR WITH NO ADDITIONAL COST THE OWNER. NO EXCAVATION SHALL COMMENCE UNTIL ALL INVOLVED UTILITY COMPANIES AND/OR CITY WHOSE FACILITIES MIGHT BE AFFECTED BY ANY WORK TO BE PERFORMED BY THE CONTRACTOR ARE NOTIFIED AT LEAST 72 HOURS IN ADVANCE.

SITE NOTES:

1. CONTRACTOR SHALL BE RESPONSIBLE FOR REMOVING AND LEGALLY DISPOSING (R&D) OF ALL MATERIALS INDICATED ON THE PLANS.
2. STOCKPILES OF EARTH MATERIALS SHALL NOT BE LOCATED ADJACENT TO DRAINAGE STRUCTURES.
3. ALL DISTURBED AREAS OUTSIDE OF THE PAVED AREAS WILL RECEIVE A MINIMUM OF 6" OF LOAM AND SEED.
4. THE CONTRACTOR SHALL PROVIDE AND MAINTAIN SURVEY LAYOUT SERVICES FOR THE WORK AND SHALL SUBMIT "AS-BUILT" DRAWINGS OF ALL WORK, WHICH SHALL BE STAMPED AND CERTIFIED BY A RHODE ISLAND REGISTERED PROFESSIONAL LAND SURVEYOR.
5. ANY ITEM OF WORK NOT SPECIFICALLY INDICATED ON THE PLANS BUT IS REQUIRED FOR THE COMPLETE CONSTRUCTION OF THE PROJECT WILL BE CONSIDERED INCIDENTAL TO THE CONTRACT AND INCLUDED IN THE CONTRACT BID PRICE. IT WILL BE THE CONTRACTOR'S RESPONSIBILITY TO VERIFY ALL EXISTING SITE CONDITIONS.
6. REFER TO ARCHITECTURAL AND STRUCTURAL PLANS FOR ACTUAL SIZE OF THE PROPOSED BUILDING.
7. WHERE NECESSARY TO REMOVE CURBS, CATCH BASINS OR DRAINS TO COMPLETE WORK, THE CONTRACTOR SHALL REPLACE SUCH ITEMS TO THE SATISFACTION OF THE ENGINEER AT NO ADDITIONAL COST TO THE OWNER.
8. ANY EXISTING PIPE OR UTILITY DAMAGED BY THE CONTRACTOR'S OPERATIONS SHALL BE REPAIRED IMMEDIATELY BY THE CONTRACTOR AT NO COST TO THE OWNER OR ENGINEER.
9. THE CONTRACTOR SHALL RESTORE TO ITS ORIGINAL CONDITION OR REPLACE TREES, SHRUBS, FENCES, SIGNS, GUARDRAILS, DRIVEWAYS, SIDEWALKS AND ANY OTHER OBJECT AFFECTED BY THIS OPERATION.
10. THE TOPS OF ALL VALVE BOXES AND CURB BOXES SHALL BE FLUSH WITH GROUND OR PAVEMENT SURFACE LEVEL AND PLUMB, UNLESS OTHERWISE DIRECTED.
11. ROADWAYS SHALL BE LEFT PASSABLE AT ALL TIMES. CLOSURE OF ROADWAY IS NOT PERMITTED.
12. THE CONTRACTOR SHALL PROVIDE ACCESS TO ALL DRIVEWAYS AT COMPLETION OF EACH DAYS WORK.
13. WATER SERVICE SHALL BE MAINTAINED AT ALL TIMES.
14. ALL LEDGE TO BE REMOVED BY MECHANICAL MEANS.
15. ALL CONSTRUCTION WORK SHALL BE PERFORMED IN THE DRY. THE CONTRACTOR SHALL PROVIDE, OPERATE AND MAINTAIN ALL PUMPS, DRAINS, WET POINTS, SCREENS, OR OTHER FACILITIES NECESSARY TO CONTROL, COLLECT AND DISPOSE OF ALL SURFACE AND SUBSURFACE WATER ENCOUNTERED IN THE PERFORMANCE OF THE WORK.
16. REFER TO PLUMBING PLANS FOR CONTINUATION OF ALL UTILITIES WITHIN 5' (FIVE) FEET OF THE BUILDING.
17. ALL SITE WORK, INCLUDING BUT NOT LIMITED TO, BITUMINOUS PAVEMENT, ROADWAY CONSTRUCTION, AGGREGATE MATERIALS, DRAINAGE STRUCTURES, CURBING, SIDEWALK, LANDSCAPING, SAW CUTTING, ETC. SHALL CONFORM TO THE RHODE ISLAND DEPARTMENT OF TRANSPORTATION STANDARD SPECIFICATIONS FOR ROADWAY AND BRIDGE CONSTRUCTION, 2010 EDITION (WITH LATEST ADDENDA) AND THE RIDOT STANDARD DETAILS, 1998 EDITION (WITH LATEST ADDENDA).

MISCELLANEOUS UTILITY NOTES:

1. PRIOR TO CONSTRUCTION ALL POTENTIAL UTILITY/DRAINAGE CONFLICTS MUST BE IDENTIFIED BY THE CONTRACTOR. ANY MODIFICATIONS TO THE PROPOSED UTILITIES TO AVOID CONFLICTS MUST BE APPROVED BY THE ENGINEER PRIOR TO CONSTRUCTION. NO EXTRA PAYMENT TO THE CONTRACTOR DUE TO RELOCATION'S WILL BE AUTHORIZED.
2. THE UTILITY PLAN DOES NOT DEPICT THE NECESSARY ELECTRICAL CONDUIT/WIRING TO SERVICE THE PROPOSED LIGHTING AND SIGNS, WHICH WILL BE PERFORMED BY THE CONTRACTOR FOR NO ADDITIONAL COST.
3. OVERHEAD ELECTRIC AND TELEPHONE SERVICES ARE TO BE REMOVED BY THE APPROPRIATE UTILITY COMPANY AND COORDINATED BY THE CONTRACTOR.
4. THE CONTRACTOR SHALL AT ALL TIMES PROVIDE A SUFFICIENT NUMBER OF WORKMEN AND GUARDS AS MAY BE NECESSARY TO PROPERLY SAFEGUARD THE PUBLIC FROM THERE OPERATIONS.
5. THE CONTRACTOR SHALL TAKE PRECAUTIONS AGAINST DAMAGING OF PAVING, SIDEWALKS, UTILITIES, OR PRIVATE PROPERTIES AND SHALL PROMPTLY REPAIR AT HIS OWN EXPENSE ANY DAMAGE TO SUCH PAVING, SIDEWALKS, UTILITIES, OR PRIVATE PROPERTIES TO THE SATISFACTION OF THE OWNER OR CITY.
6. EXISTING UTILITY FRAMES AND COVERS FOR SANITARY SEWER, WATER, GAS, STORM DRAINAGE AND OTHER UTILITIES SHALL BE ADJUSTED TO GRADE AS REQUIRED IN NEW PAVING AND PAVEMENT OVERLAY AREAS.

DRAINAGE SYSTEM NOTES:

1. ALL RIM ELEVATIONS SHOWN ARE APPROXIMATE AND ARE TO BE SET FLUSH WITH FINAL GRADES
2. THE DESIGN ENGINEER MUST SUBMIT AN AS BUILT PLAN AND A CERTIFICATION TO THE CITY ENGINEER THAT THE CONSTRUCTION IS IN COMPLIANCE WITH THE DESIGN PLANS FOR ALL ELEMENTS OF THE STORM OR DRAINAGE SYSTEM PRIOR TO THE ISSUANCE OF THE CERTIFICATE OF OCCUPANCY.
3. AN IDENTICAL COPY OF THIS AS-BUILT AND CERTIFICATION SHALL BE SENT TO THE RIDEM WATER RESOURCES, WETLAND SECTION UPON ITS COMPLETION.

PROPOSED PAVEMENT STRUCTURE:

(SEE ROADWAY TYPICAL SECTION FOR PAVEMENT MAKEUP)

PROPOSED PAVEMENT STRUCTURE:
(DIAMOND HILL ROAD - RIDOT)

2" MODIFIED CLASS 12.5 HMA
3" CLASS 19 HMA
12" GRAVEL BORROW SUBBASE COURSE

ASPHALT EMULSION TACK COAT BETWEEN HMA LAYERS AND ON VERTICAL FACES.

LAYOUT NOTE:

THE LAYOUT SHOWN REPRESENTS A GRAPHICAL DESIGN, AND PRIOR TO THE CONSTRUCTION, THE CONTRACTOR SHALL ENGAGE A PROFESSIONAL LAND SURVEYOR (PLS) REGISTERED IN THE STATE OF RHODE ISLAND TO SET AND VERIFY ALL LINES AND GRADES. ALL EXISTING UTILITY LOCATIONS AND ELEVATIONS ARE TO BE CONFIRMED BY THE CONTRACTOR PRIOR TO CONSTRUCTION. ANY ITEMS FOUND WHICH DO NOT MATCH THE PLANS MUST BE BROUGHT TO THE ENGINEERS ATTENTION PRIOR TO CONSTRUCTION FOR REVIEW. NO WORK SHALL PROCEED UNTIL AUTHORIZED BY THE ENGINEER.

MAINTENANCE AND PROTECTION OF TRAFFIC NOTES:

1. THE CONTRACTOR SHALL BE RESPONSIBLE FOR ALL MAINTENANCE AND PROTECTION OF PEDESTRIAN AND VEHICULAR TRAFFIC INCLUDING POLICE PROTECTION DURING ALL CONSTRUCTION ACTIVITIES WITHIN ROADWAY RIGHT-OF-WAY.
2. ALL TRAFFIC CONTROL, TEMPORARY AND VEHICULAR SIGNS, BARRICADES AND LANE CLOSURES SHALL BE IN CONFORMANCE WITH THE LATEST REVISIONS OF MANUAL OF UNIFORM TRAFFIC CONTROL DEVICES (M.U.T.C.D.), 2009 EDITION, INCLUDING ALL REVISIONS.
3. TEMPORARY CONSTRUCTION SIGNS AND ALL APPLICABLE TRAFFIC CONTROL DEVICES SHALL BE IN PLACE PRIOR TO THE START OF WORK IN ANY AREA OPEN TO TRAFFIC.
4. THE PRIVATE VEHICLES OF CONSTRUCTION WORKERS SHALL NOT BE PARKED IN THE STATE OR CITY RIGHT-OF-WAY.
5. ALL MAINTENANCE AND PROTECTION OF TRAFFIC CONTROL SETUPS, SIGNS CHANNELING DEVICES, ETC, SHALL BE IN ACCORDANCE WITH THE MANUAL OF UNIFORM TRAFFIC CONTROL DEVICES. 1988 EDITION. INCLUDING REVISION 3, SEPTEMBER 3, 1993 AND SUBSEQUENT ADDENDA.
6. SIGN MOUNTINGS SHALL BE IN ACCORDANCE WITH THE R.I.D.O.T. SPECIFICATIONS FOR TEMPORARY CONSTRUCTION SIGNS.

DRAINAGE AND SUBSURFACE DRAINAGE SYSTEM MAINTENANCE SCHEDULE:

UPON PROJECT COMPLETION, THE PROPERTY OWNER SHALL ADHERE TO THE FOLLOWING MAINTENANCE PLAN AND SCHEDULE:

1. CATCH BASINS, MANHOLES AND DRAIN LINES: AN INSPECTION MUST OCCUR ON AN ANNUAL BASIS BY QUALIFIED PERSONAL TO ENSURE PROPER OPERATION. ANY DEFICIENCY NOTED DURING THE INSPECTION WILL BE IMMEDIATELY REPAIRED OR REPLACED. THE INSPECTION SHOULD, AS A MINIMUM, CONCENTRATE ON THE FOLLOWING:
   * DAMAGE TO GRATE/ COVERS
   * EVIDENCE OF STANDING WATER
   * DEBRIS REMOVAL
   * STRUCTURAL ALIGNMENT/ INTEGRITY
   * OIL/WATER SEPARATORS
2. IF SEDIMENT OR ORGANIC DEBRIS BUILD-UP HAS LIMITED THE INFILTRATION CAPABILITIES OF THE UNDERGROUND INFILTRATION CHAMBERS OR TRENCHES TO BELOW THE DESIGN RATE THE SYSTEM MUST BE REMOVED AND RE-CONSTRUCTED. THE SYSTEMS BOTTOM SHOULD BE RESTORED ACCORDING TO ORIGINAL DESIGN SPECIFICATIONS.
3. SEDIMENT REMOVAL: ALL REMOVED SEDIMENT IS TO BE TESTED TO DETERMINE POLLUTANT CONTENT. THE SEDIMENT IS TO BE PROPERLY DISPOSED IN UPLAND AREAS BASED UPON THE TEST RESULTS AND LOCAL, STATE, AND FEDERAL REGULATIONS.
4. THE PROPERTY OWNER IS RESPONSIBLE FOR ANY SOIL AND GROUNDWATER CONTAMINATION RESULTING FROM THE USE OF THE STORMWATER RUNOFF SUBSURFACE DRAINAGE SYSTEM.

WATER NOTES:

1. ALL INSTALLATIONS, JOINTS, CONSTRUCTION METHODS AND MATERIALS SHALL BE ACCORDING TO THE WOONSOCKET WATER DEPARTMENT REQUIREMENTS, AWWA STANDARDS AND GOVERNMENTAL REQUIREMENTS.
2. INSTALLATION OF ALL WATER CONVEYANCES, MAINS, PIPES OR LINES SHALL BE IN ACCORDANCE WITH THE DUCTILE IRON PIPE RESEARCH ASSOCIATION'S INSTALLATION MANUAL AND ANSI/AWWA C600 AND ALL OTHER REQUIREMENTS OF THE WOONSOCKET WATER DEPARTMENT.
3. WATER PIPES SHALL TYPICALLY BE LOCATED AT LEAST TEN (10) FEET HORIZONTALLY FROM SEWER PIPES, AND AT A MINIMUM DEPTH OF COVER EQUAL TO 5'-0". WHERE A NEW WATER PIPE IS LESS THAN 18 INCHES CLEAR DISTANCE ABOVE A SEWER OR WHERE A WATER PIPE PASSES BENEATH A SEWER OR STORM DRAIN, ENCASE THE SEWER OR DRAIN IN 6" OF CONCRETE FOR A DISTANCE OF 10 FEET ON EACH SIDE OF THE CROSSING WATER PIPE.
4. ALL SYSTEM COMPONENTS AND CONSTRUCTION METHODS; SUCH AS PIPE, THRUST BLOCKS, FITTINGS, CASTINGS, ETC. SHALL BE SUBMITTED TO THE ENGINEER FOR APPROVAL PRIOR TO PURCHASE AND INSTALLATION. THIS SUBMISSION SHALL INCLUDE MANUFACTURER'S LITERATURE, SHOP DRAWINGS, PROPOSED CONSTRUCTION METHODS, ETC.
5. WATER LINE TRENCH TO BE AWWA TYPE 5 A METALIZED DETECTABLE IDENTIFICATION TAPE 2" IN WIDTH, BLUE IN COLOR AND PRINTED WITH "CAUTION WATERLINE BURIED BELOW" SHALL BE UTILIZED OVER ALL MAINS. TAPE SHALL BE SET AT APPROXIMATELY 1' BELOW FINISHED GRADE.
6. THE CONTRACTOR SHALL RECEIVE VERIFICATION FROM THE ENGINEER AS TO THE APPROPRIATE SIZE OF THE DOMESTIC WATER AND FIRE PROTECTION LINE SHOWN ON THE PLANS PRIOR TO ORDERING WATER PIPE RELATED ITEMS.
7. ALL SITE WORK, INCLUDING BUT NOT LIMITED TO, BITUMINOUS PAVEMENT, GRAVEL, STONE, DRAINAGE PIPE AND RELATED STRUCTURES, WATER, SEWER, AND DRAIN LINE INSTALLATION, PAVEMENT SAW CUTTING, ETC. SHALL CONFORM TO THE RHODE ISLAND DEPARTMENT OF TRANSPORTATION STANDARD SPECIFICATIONS FOR ROADWAY AND BRIDGE CONSTRUCTION AMENDED AUGUST 2013 WITH ALL REVISIONS AND LATEST ADDENDA. STANDARD DETAILS FOR THIS WORK ARE RI STANDARD DETAILS 1998 EDITION WITH ALL REVISIONS.
8. SPECIFIC BENDS ARE SHOWN ON THE DRAWINGS. THE CONTRACTOR SHALL PROVIDE ADDITIONAL BENDS AS NECESSARY TO INSTALL THE PIPE AT THE REQUIRED DEPTH AND ALIGNMENT.
9. INSPECTION OF ALL INSTALLATIONS SHALL BE CONDUCTED TO ENSURE COMPLIANCE WITH THE RULES AND REGULATIONS OF THE WOONSOCKET WATER DEPARTMENT. WOONSOCKET WATER EMPLOYEES SHALL BE GIVEN FULL ACCESS TO THE PROJECT AT ALL TIMES FOR INSPECTION OR OBSERVATION OF CONSTRUCTION IN PROGRESS AS DEEMED NECESSARY BY THE AUTHORITY. FAILURE TO CONSTRUCT THE NEW EXTENSION OF THE SYSTEM AS PER THE APPROVED DESIGN DRAWINGS OR WOONSOCKET WATER DEPARTMENT'S RULES AND REGULATIONS WILL CAUSE IMMEDIATE CESSATION OF ALL CONSTRUCTION WORK. INSPECTION FEES MUST BE PAID IN FULL PRIOR TO COMMENCING INSTALLATION WORK.

RIDOT

1. ALL WORK TO BE DONE WITHIN THE STATE RIGHT-OF-WAY SHALL CONFORM TO THE RHODE ISLAND DEPARTMENT OF TRANSPORTATION STANDARD SPECIFICATIONS FOR ROADWAY AND BRIDGE CONSTRUCTION AMENDED AUGUST 2013 WITH ALL REVISIONS AND LATEST ADDENDA. STANDARD DETAILS FOR THIS WORK ARE RI STANDARD DETAILS 1998 EDITION WITH ALL REVISIONS.
2. A SEPARATE RIDOT UTILITY PERMIT APPLICATION AND APPROVAL IS REQUIRED FOR ANY UTILITY WORK (INCLUDING SEWER, WATER, GAS, ELECTRIC, ETC.) WITHIN THE STATE RIGHT-OF-WAY TO BE OBTAINED BY THE CONTRACTOR PRIOR TO CONSTRUCTION.

LEGEND

EXISTING PROPERTY LINE
ABUTTING PROPERTY LINE
BUILDING SETBACK LINE
WETLAND EDGE
100 EXISTING CONTOUR
100 PROPOSED CONTOUR
EXISTING STONE WALL
IRON ROD
DRILL HOLE
CONCRETE BOUND
EXISTING CURB
CHAIN LINK FENCE
D DRAIN LINE
D DRAINAGE MANHOLE
CATCH BASIN
UTILITY POLE
OHW OVERHEAD WIRES
UGE UNDERGROUND ELECTRIC
GAS GAS LINE
W WATER LINE
WV WATER SHUT OFF VALVE
GV GAS VALVE
S SEWER
S SMH
N/F NOW OR FORMERLY
LOD LIMIT OF DISTURBANCE
TP SOIL EVALUATION
BUILDING DOOR LOCATION
CUT AND MATCH LINE (SAW CUT)
HANDICAPPED PARKING
STOP SIGN
ELECTRIC SIGN
PAINTED TRAFFIC ARROW
LIGHT POLE
C/O CLEAN OUT
x 308.5 SPOT GRADE
AD ASPHALT DRIVE
GD GRAVEL DRIVE
T APPROXIMATE CELL TOWER

Kindly be advised that this Permit is not equivalent to a verification of the type or extent of freshwater wetlands on site.

DEPARTMENT OF ENVIRONMENTAL MANAGEMENT
OFFICE OF WATER RESOURCES
FRESHWATER WETLANDS PROGRAM
APPROVED WITH CONDITIONS
AS SPECIFIED IN THE LETTER OF APPROVAL
DATED MAR 11 2019 FILE # 17-0255
NO CHANGES ALLOWED WITHOUT PRIOR APPROVAL
APPROVED PLANS MUST BE AT CONSTRUCTION SITE
Martin D. Wencek

MAR 2019

REVISIONS:	
NO. DATE.	DESCRIPTION
1. 8-23-17	City Engineering Review Comments of 8-3-17
2. - 4. 12-17 to 5-19	RIDEM and RIDOT Review Comments of 11-20 -17, 11-30-17 and 5-8-18
5. 3-1-19	Roadway Profile Modification
DESIGNED BY:	DMD
CHECKED BY:	DMD
DATE:	7-1-17
PROJECT NO:	15-0001-11

SAPPHIRE ESTATES
MAJOR SUBDIVISION OF LAND PROJECT
MAP B6, LOTS 38-13 & 38-524
DIAMOND HILL ROAD AND WILCOX STREET
WOONSOCKET, RHODE ISLAND

DAVID M. D'AMICO
No. 6749
REGISTERED PROFESSIONAL ENGINEER CIVIL
3/1/19

DEtec.
D'AMICO ENGINEERING TECHNOLOGY, INC.
Civil · Transportation · Land Use
2080 Mineral Spring Ave., North Providence, RI 02911
(401) 622-1470 (401) 353-1190 fax www.dengineeringtec.com

MODIFIED CONSTRUCTION PLANS

GENERAL NOTES AND LEGEND

N:\D'Amico Engineering Technology, Inc\15-0001 Marc N Nyberg\11 Diamond Hill Rd Subdivision\Sapphire Estates Subdivision Construction Plans MOD 3-1-19.dwg Mar. 02, 2019 3:46pm

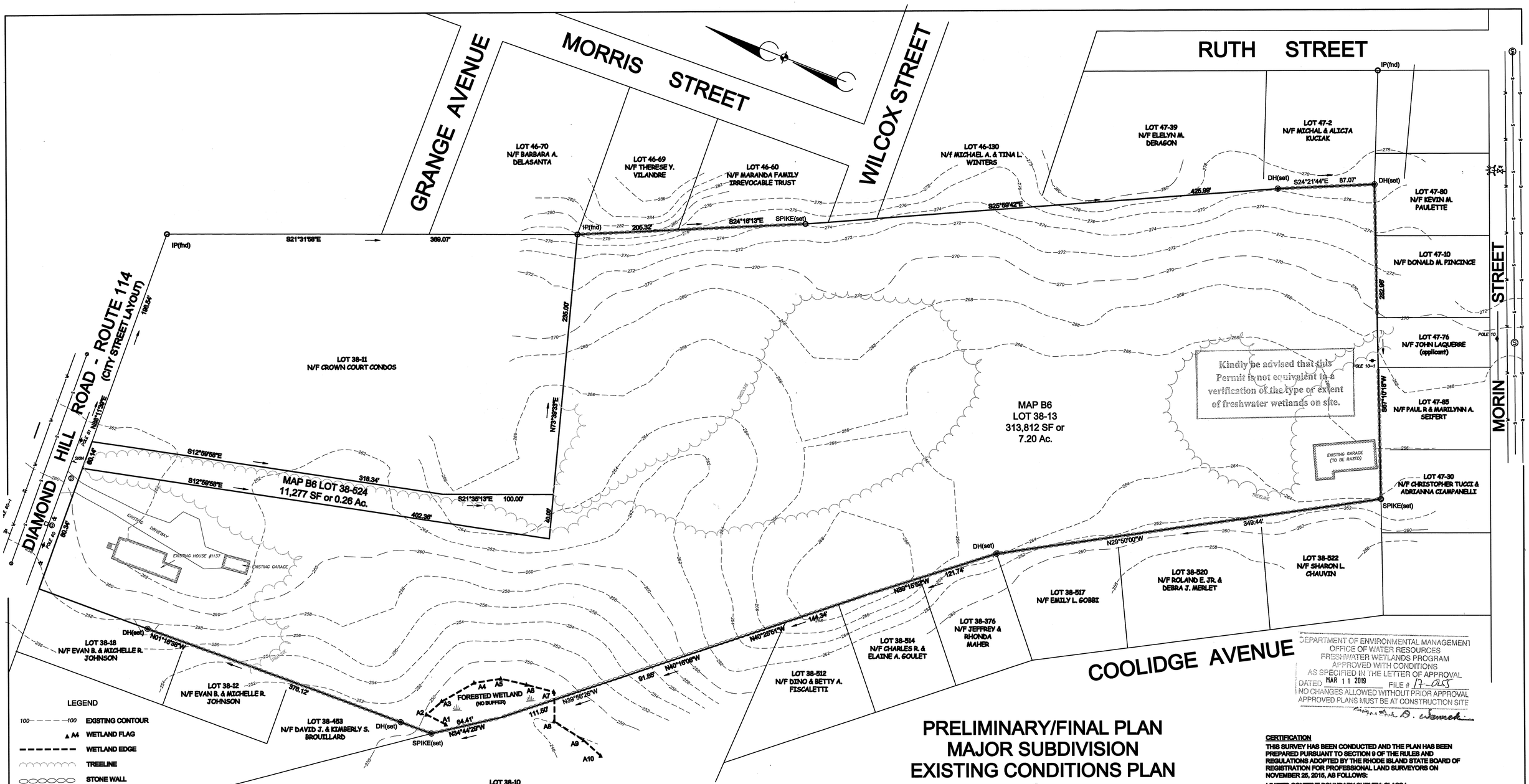

LEGEND

- 100 — 100 EXISTING CONTOUR
- ▲ A4 WETLAND FLAG
- WETLAND EDGE
- TREELINE
- STONE WALL
- UTILITY POLE
- DRAIN MANHOLE
- SEWER MANHOLE
- HYDRANT
- WATER VALVE
- S SEWER LINE
- W WATER LINE
- G GAS LINE

ZONING DISTRICT: R3
MIN. AREA: 7,000 SF
MIN. FRONTAGE: 70'
MIN. LOT WIDTH AT BUILDING LINE: 70'
MIN. LOT COVERAGE: 35%
MIN. BUILDING HEIGHT: 30'
MIN. SETBACKS: FRONT: 20'
SIDE: 10'
REAR: 25'

NOTES:

1. OWNER/APPLICANT: JOHN LAQUERRE
276 SAINT LOUIS AVENUE, WOONSOCKET, RI 02895
2. SITE IS NOT WITHIN ANY FLOOD HAZARD ZONE AS SHOWN ON FLOOD INSURANCE RATE MAP PANEL 88 OF 451, MAP NUMBER 44007C0088G, EFFECTIVE DATE: MARCH 2, 2009.
3. WETLAND DELINEATION BY: NATURAL RESOURCE SERVICES, INC.
4. ELEVATIONS ARE BASED UPON NAVD88.

TEST HOLE DATA
DATE: 3-29-17

TH1
0–10" Ap, SL, 10YR 3/2
10"–36" Bw, SL, 10YR 5/4
36"–60" C, G, CB, SL, 5YR 5/3
60"–108" C2, G, CB, SL, 10YR 4/2
ESHWT: 108"
NO LEDGE AT 108"

TH2
0–6" Ap, SL, 10YR 3/2
6"–24" Bw, SL, 10YR 4/6
24"–32" C, G, CB, SL, 10YR 5/3
32"–108" C2, G, CB, SL, 10YR 4/3
ESHWT: 60"
NO LEDGE AT 108"

TH3
0–6" Ap, SL, 10YR 3/2
6"–30" Bw, SL, 10YR 5/4
30"–60" C, G, CB, SL, 5YR 5/3
60"–108" C2, G, CB, SL, 10YR 4/3
ESHWT: 30"
NO LEDGE AT 108"

TH4
0–30" FILL
30"–36" Ap, SL, 10YR 3/2
36"–48" C, FSL, 5YR 5/3
48"–108" C2, G, SL, 10YR 4/3
ESHWT: 10"
NO LEDGE AT 108"

PRELIMINARY/FINAL PLAN
MAJOR SUBDIVISION
EXISTING CONDITIONS PLAN
for
SAPPHIRE ESTATES
MAP B6, LOTS 38-13 & 38-524
DIAMOND HILL ROAD & WILCOX STREET
WOONSOCKET, RHODE ISLAND
JUNE, 2016
REVISED: DECEMBER 11, 20167

GRAPHIC SCALE
0' 40' 80' 120'

DEPARTMENT OF ENVIRONMENTAL MANAGEMENT
OFFICE OF WATER RESOURCES
FRESHWATER WETLANDS PROGRAM
APPROVED WITH CONDITIONS
AS SPECIFIED IN THE LETTER OF APPROVAL
DATED MAR 11 2019 FILE # 17-055
NO CHANGES ALLOWED WITHOUT PRIOR APPROVAL
APPROVED PLANS MUST BE AT CONSTRUCTION SITE
Marcia D. Ewanuck

CERTIFICATION
THIS SURVEY HAS BEEN CONDUCTED AND THE PLAN HAS BEEN PREPARED PURSUANT TO SECTION 9 OF THE RULES AND REGULATIONS ADOPTED BY THE RHODE ISLAND STATE BOARD OF REGISTRATION FOR PROFESSIONAL LAND SURVEYORS ON NOVEMBER 25, 2015, AS FOLLOWS:

LIMITED CONTENT BOUNDARY SURVEY: CLASS I
TOPOGRAPHIC ACCURACY T-4

STATEMENT OF PURPOSE
THE PURPOSE FOR THE CONDUCT OF THE SURVEY AND THE PREPARATION OF THE PLAN IS AS FOLLOWS: 25 LOT SUBDIVISION

BY: Marc N. Nyberg
MARC N. NYBERG License No. 1797 COA No.: A52

MAR 4 2019

MARC N. NYBERG
No. 1797
PROFESSIONAL LAND SURVEYOR

Marc N. Nyberg Associates, Inc.
Land Surveyors
Planners
GPS
501 Great Road
Unit 104
North Smithfield, RI 02896
Tel: (401) 762-2870
Fax: (401) 762-2871
Email: mail@marcnyberg.com

SHEET 3 OF 15

16–118

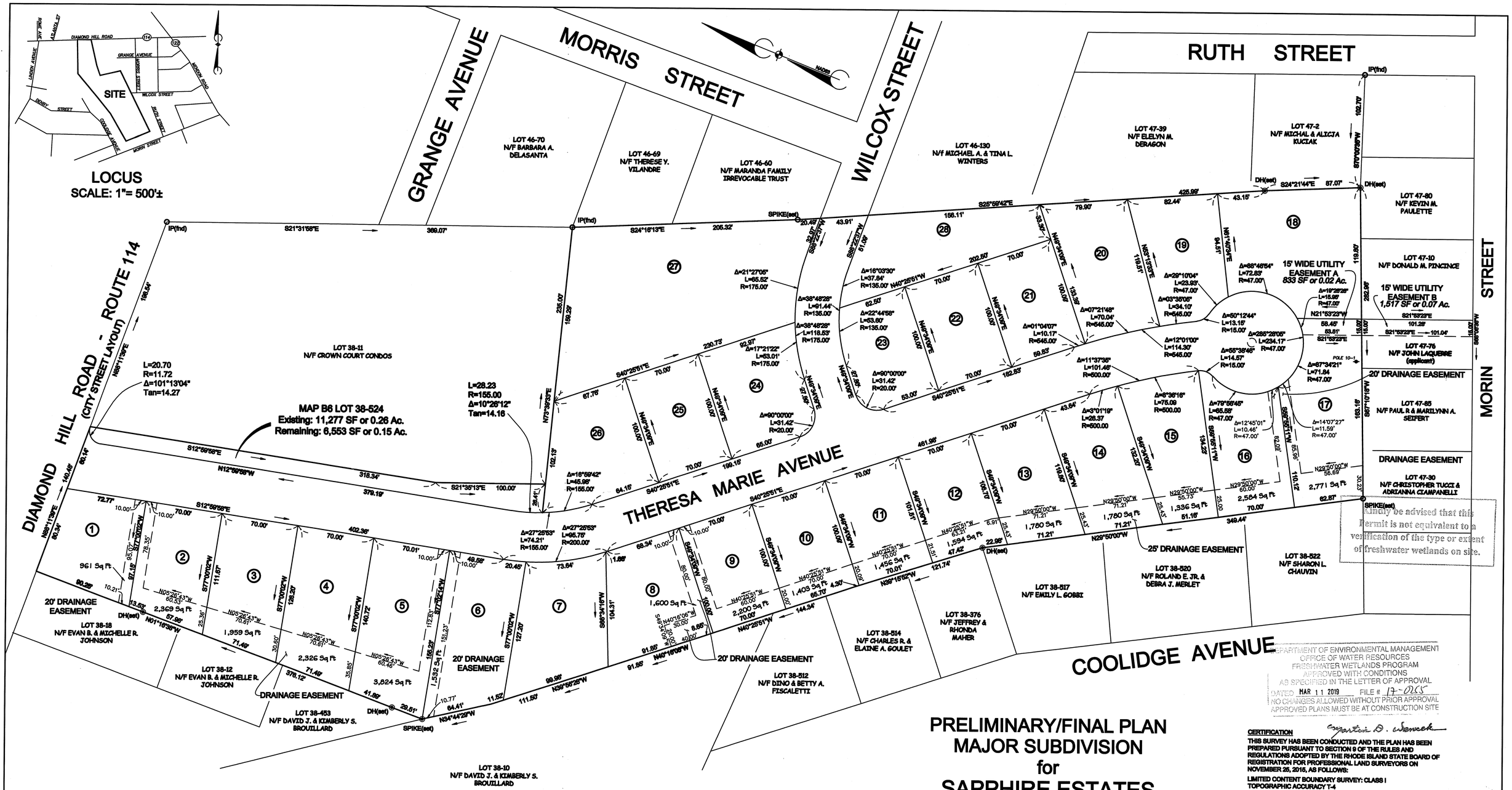

DEPARTMENT OF ENVIRONMENTAL MANAGEMENT
OFFICE OF WATER RESOURCES
FRESHWATER WETLANDS PROGRAM
APPROVED WITH CONDITIONS
AS SPECIFIED IN THE LETTER OF APPROVAL
DATED MAR 11 2019 FILE # 17-0115
NO CHANGES ALLOWED WITHOUT PRIOR APPROVAL
APPROVED PLANS MUST BE AT CONSTRUCTION SITE

PRELIMINARY/FINAL PLAN
MAJOR SUBDIVISION
for
SAPPHIRE ESTATES
MAP B6, LOTS 38-13 & 38-524
DIAMOND HILL ROAD & WILCOX STREET
WOONSOCKET, RHODE ISLAND
DECEMBER 11, 2017
REVISED: 4-9-18
SCALE: 1 INCH EQUALS 40 FEET

GRAPHIC SCALE
0' 40' 80' 160'

ZONING DISTRICT: R3
MIN. AREA: 7,000 SF
MIN. FRONTAGE: 70'
MIN. LOT WIDTH AT BUILDING LINE: 70'
MIN. LOT COVERAGE: 35%
MIN. BUILDING HEIGHT: 30'
MIN. SETBACKS: FRONT: 20'
SIDE: 10'
REAR: 25'

NOTES:

1. OWNER/APPLICANT: JOHN LAQUERRE
   276 SAINT LOUIS AVENUE, WOONSOCKET, RI 02895
2. SITE IS NOT WITHIN ANY FLOOD HAZARD ZONE AS SHOWN ON FLOOD INSURANCE RATE MAP PANEL 68 OF 451, MAP NUMBER 44007C0068G, EFFECTIVE DATE: MARCH 2, 2009.
3. THERE WILL TWO PHASES.
4. SITE IS COMPATIBLE WITH THE NEIGHBORHOOD WHICH IS DENSELY POPULATED. SITE WILL INGRESS/EGRESS ONTO MAIN ROADWAY (DIAMOND HILL ROAD, ROUTE 114) .
5. WETLAND DELINEATION BY: NATURAL RESOURCE SERVICES, INC.
6. ELEVATIONS ARE BASED UPON NAVD88.

CERTIFICATION
THIS SURVEY HAS BEEN CONDUCTED AND THE PLAN HAS BEEN PREPARED PURSUANT TO SECTION 9 OF THE RULES AND REGULATIONS ADOPTED BY THE RHODE ISLAND STATE BOARD OF REGISTRATION FOR PROFESSIONAL LAND SURVEYORS ON NOVEMBER 28, 2016, AS FOLLOWS:
LIMITED CONTENT BOUNDARY SURVEY: CLASS I
TOPOGRAPHIC ACCURACY T-4

STATEMENT OF PURPOSE
THE PURPOSE FOR THE CONDUCT OF THE SURVEY AND THE PREPARATION OF THE PLAN IS AS FOLLOWS: SUBDIVISION

BY: Marc N. Nyberg
MARC N. NYBERG License No. 1797 COA No.: A52

MARC N. NYBERG No. 1797 PROFESSIONAL LAND SURVEYOR

Marc N. Nyberg Associates, Inc.
Land Surveyors
Planners
GPS
501 Great Road
Unit 104
North Smithfield, RI 02896
Tel: (401) 762-2870
Fax: (401) 762-2871
Email: mail@marcnyberg.com

16–118

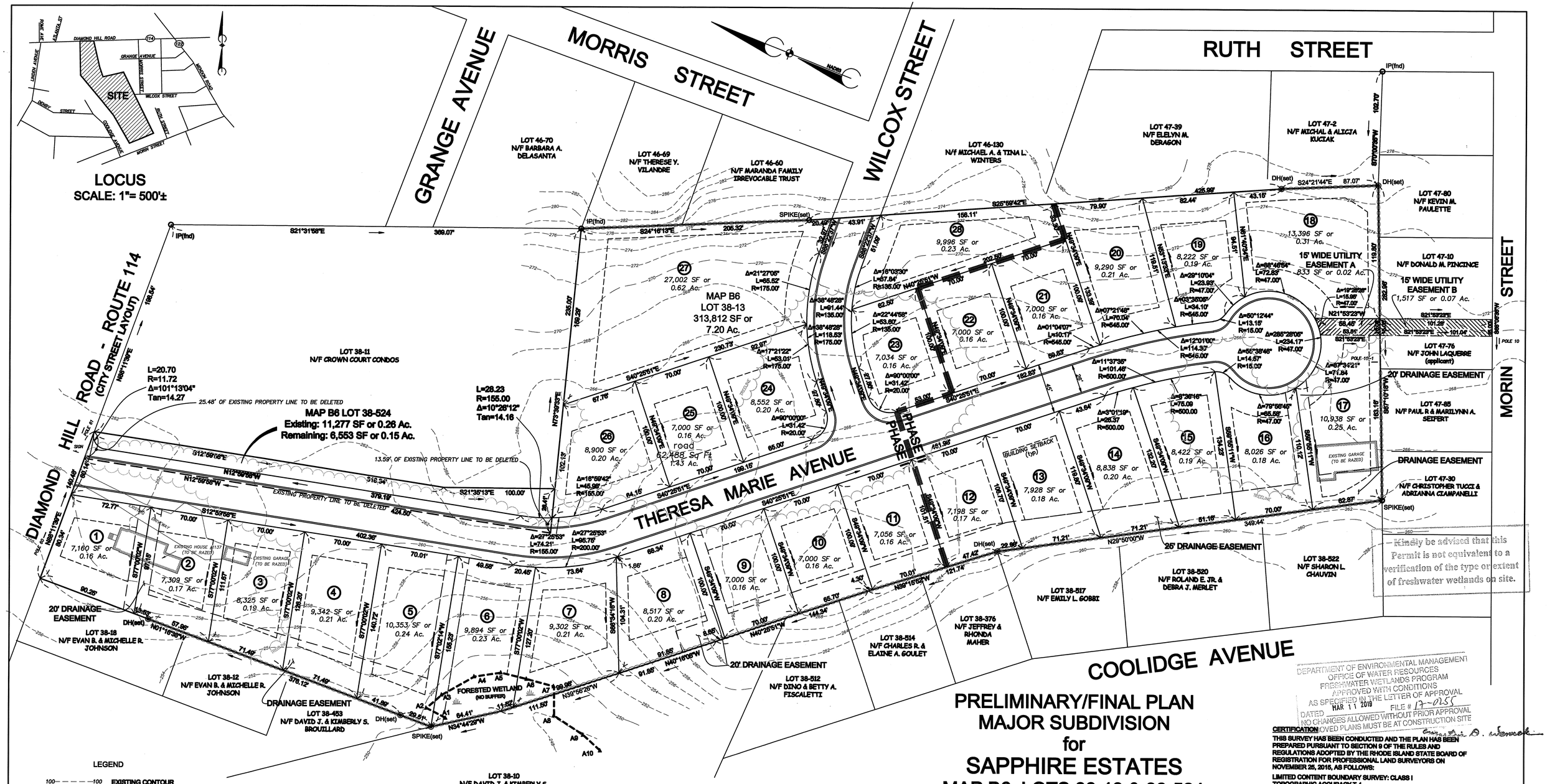

Kindly be advised that this Permit is not equivalent to a verification of the type or extent of freshwater wetlands on site.

DEPARTMENT OF ENVIRONMENTAL MANAGEMENT
OFFICE OF WATER RESOURCES
FRESHWATER WETLANDS PROGRAM
APPROVED WITH CONDITIONS
AS SPECIFIED IN THE LETTER OF APPROVAL
DATED MAR 11 2019 FILE # 17-0155
NO CHANGES ALLOWED WITHOUT PRIOR APPROVAL
APPROVED PLANS MUST BE AT CONSTRUCTION SITE

LEGEND

- 100 — — — 100 EXISTING CONTOUR
- ▲ A4 WETLAND FLAG
- WETLAND EDGE
- TREELINE
- STONE WALL
- UTILITY POLE

ZONING DISTRICT: R3
MIN. AREA: 7,000 SF
MIN. FRONTAGE: 70'
MIN. LOT WIDTH AT BUILDING LINE: 70'
MIN. LOT COVERAGE: 35%
MIN. BUILDING HEIGHT: 30'
MIN. SETBACKS: FRONT: 20'
SIDE: 10'
REAR: 25'

NOTES:

1. OWNER/APPLICANT: JOHN LAQUERRE
   276 SAINT LOUIS AVENUE, WOONSOCKET, RI 02895
2. SITE IS NOT WITHIN ANY FLOOD HAZARD ZONE AS SHOWN ON FLOOD INSURANCE RATE MAP PANEL 88 OF 451, MAP NUMBER 44007C0088G, EFFECTIVE DATE: MARCH 2, 2009.
3. THERE WILL TWO PHASES.
4. SITE IS COMPATIBLE WITH THE NEIGHBORHOOD WHICH IS DENSELY POPULATED. SITE WILL INGRESS/EGRESS ONTO MAIN ROADWAY (DIAMOND HILL ROAD, ROUTE 114).
5. WETLAND DELINEATION BY: NATURAL RESOURCE SERVICES, INC.
6. ELEVATIONS ARE BASED UPON NAVD88.

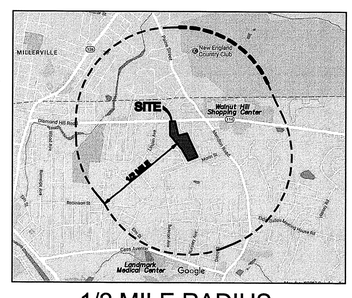

1/2 MILE RADIUS
SCALE: 1"= 2,000'±

PRELIMINARY/FINAL PLAN
MAJOR SUBDIVISION
for
SAPPHIRE ESTATES
MAP B6, LOTS 38-13 & 38-524
DIAMOND HILL ROAD & WILCOX STREET
WOONSOCKET, RHODE ISLAND
NOVEMBER 30, 2016

REVISED: DECEMBER 22, 2016
JANUARY 23, 2017
MARCH 7, 2017
MARCH 23, 2017
MAY, 30, 2017
JUNE 15, 2017
JUNE 27, 2017
OCTOBER 4, 2017
DECEMBER 11, 2017
APRIL 9, 2018

SCALE: 1 INCH EQUALS 40 FEET

GRAPHIC SCALE
0' 40' 80' 120'

CERTIFICATION
THIS SURVEY HAS BEEN CONDUCTED AND THE PLAN HAS BEEN PREPARED PURSUANT TO SECTION 9 OF THE RULES AND REGULATIONS ADOPTED BY THE RHODE ISLAND STATE BOARD OF REGISTRATION FOR PROFESSIONAL LAND SURVEYORS ON NOVEMBER 25, 2015, AS FOLLOWS:

LIMITED CONTENT BOUNDARY SURVEY: CLASS I
TOPOGRAPHIC ACCURACY T-4

STATEMENT OF PURPOSE
THE PURPOSE FOR THE CONDUCT OF THE SURVEY AND THE PREPARATION OF THE PLAN IS AS FOLLOWS: 28 LOT SUBDIVISION

BY: Marc N. Nyberg

MARC N. NYBERG License No. 1797 COA No.: A62

MARC N. NYBERG No. 1797 PROFESSIONAL LAND SURVEYOR

Marc N. Nyberg Associates, Inc.
Land Surveyors
Planners
GPS
501 Great Road
Unit 104
North Smithfield, RI 02896
Tel: (401) 762-2870
Fax: (401) 762-2871
Email: mail@marcnyberg.com

16–118

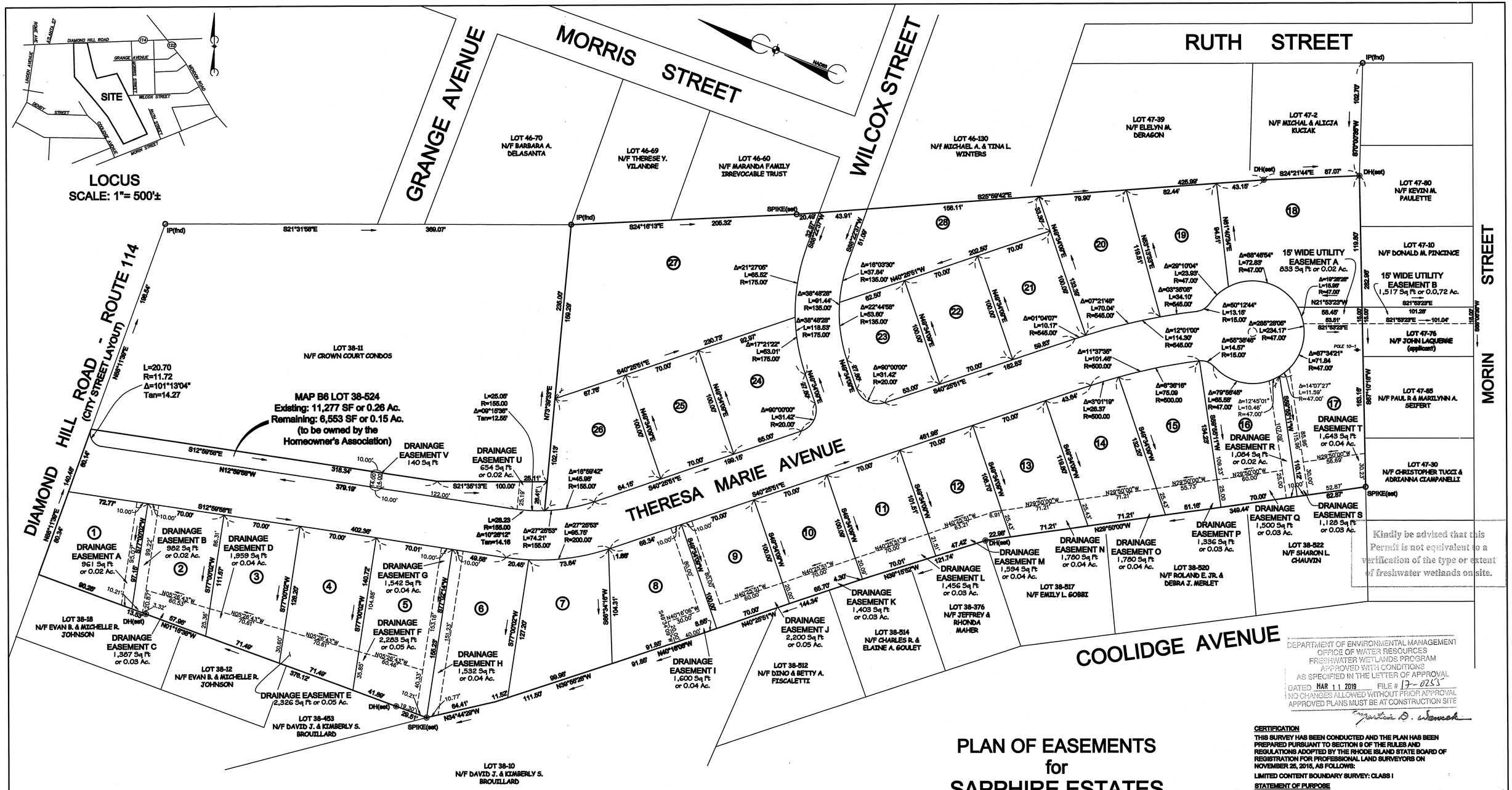

DEPARTMENT OF ENVIRONMENTAL MANAGEMENT
OFFICE OF WATER RESOURCES
FRESHWATER WETLANDS PROGRAM
APPROVED WITH CONDITIONS
AS SPECIFIED IN THE LETTER OF APPROVAL
DATED MAR 11 2019 FILE # 17-0263
NO CHANGES ALLOWED WITHOUT PRIOR APPROVAL
APPROVED PLANS MUST BE AT CONSTRUCTION SITE

USE OF EASEMENTS BY:

CITY OF WOONSOCKET
DRAINAGE EASEMENTS A, B, G, H, R, S, U & V
UTILITY EASEMENTS A & B

HOMEOWNER'S ASSOCIATION:
DRAINAGE EASEMENTS A, B, C, D, E, F, G, H, I, J, K, L, M, N, O, P, Q, R, S & T

ZONING DISTRICT: R3
MIN. AREA: 7,000 SF
MIN. FRONTAGE: 70'
MIN. LOT WIDTH AT BUILDING LINE: 70'
MIN. LOT COVERAGE: 35%
MIN. BUILDING HEIGHT: 30'
MIN. SETBACKS: FRONT: 20'
SIDE: 10'
REAR: 25'

PLAN OF EASEMENTS
for
SAPPHIRE ESTATES
MAP B6, LOTS 38-13 & 38-524
DIAMOND HILL ROAD & WILCOX STREET
WOONSOCKET, RHODE ISLAND
JULY, 2018
SCALE: 1 INCH EQUALS 40 FEET

GRAPHIC SCALE
0' 40' 80' 160'

CERTIFICATION
THIS SURVEY HAS BEEN CONDUCTED AND THE PLAN HAS BEEN PREPARED PURSUANT TO SECTION 9 OF THE RULES AND REGULATIONS ADOPTED BY THE RHODE ISLAND STATE BOARD OF REGISTRATION FOR PROFESSIONAL LAND SURVEYORS ON NOVEMBER 25, 2015, AS FOLLOWS:

LIMITED CONTENT BOUNDARY SURVEY: CLASS I

STATEMENT OF PURPOSE
THE PURPOSE FOR THE CONDUCT OF THE SURVEY AND THE PREPARATION OF THE PLAN IS AS FOLLOWS: EASEMENTS

BY: Marc N. Nyberg

MARC N. NYBERG License No. 1797 COA No.: A52

MARC N. NYBERG No. 1797 PROFESSIONAL LAND SURVEYOR

Marc N. Nyberg Associates, Inc.
Land Surveyors
Planners
GPS
501 Great Road
Unit 104
North Smithfield, RI 02896
Tel: (401) 762-2870
Fax: (401) 762-2871
Email: mail@marcnyberg.com

16-118

GENERAL SITE NOTES

1. ALL DWELLINGS ARE SINGLE FAMILY HOMES TO BE SERVICED BY PUBLIC WATER, SEWER AND GAS.
2. MONUMENTS (GRAINTE BOUNDARY MARKERS) SHALL BE SET AT EVERY CORNER AND ANGLE POINT ON THE BOUNDARY LINE OF THE SUBDIVISION AND AT EVERY ANGLE POINT OF CURVATURE ON THE PROPOSED STREET RIGHT-OF-WAY IN CONFORMANCE WITH THE CITY OF WOONSOCKET'S CURRENT LAND DEVELOPMENT AND SUBDIVISION REGULATIONS. ALSO, EACH LOT SHALL HAVE REBAR OR EQUIVALENT CORNER MARKER PLACED FLUSH WITH THE SURFACE OF THE GROUND. ALL GRANITE BOUNDS AND/OR MARKERS ARE TO BE SET BY A RI REGISTERED LAND SURVEYOR.
3. THE LOCATION AND AMOUNT OF 3 OR 2 BEDROOM HOMES WITHIN THE DEVELOPMENT FOR EACH LOT IS AN APPROXIMATION FOR DESIGN PURPOSE ONLY. FOR CALCULATION PURPOSES 3 BEDROOM HOMES HAVE BEEN UTILIZED. IT IS ANTICIPATED THAT THE MARKET AND BUYER PREFERENCE WILL DETERMINE THE FINAL NUMBER OF BEDROOMS PROPOSED ON EACH INDIVIDUAL LOT.
4. NEW ROADWAYS TO BE BUILT TO CITY OF WOONSOCKET SUBDIVISION REGULATIONS WITH 26' OF PAVEMENT, BITUMINOUS BERM, GRASS SIDEWALKS, AND UNDERGROUND TELEPHONE AND ELECTRIC LINES WITHIN A 45' WIDE RIGHT OF WAY.

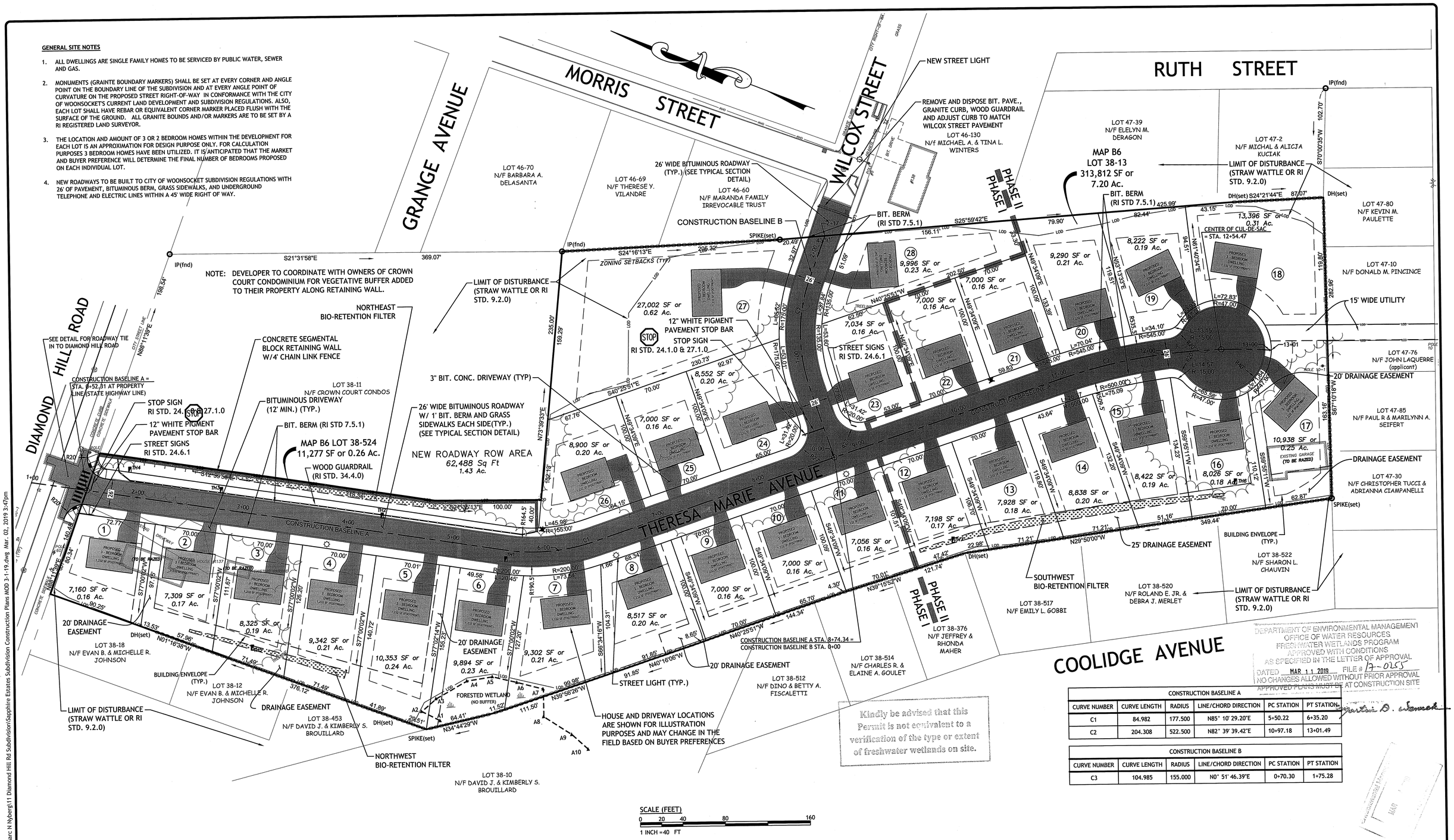

CONSTRUCTION BASELINE A					
CURVE NUMBER	CURVE LENGTH	RADIUS	LINE/CHORD DIRECTION	PC STATION	PT STATION
C1	84.982	177.500	N85° 10' 29.20"E	5+50.22	6+35.20
C2	204.308	522.500	N82° 39' 39.42"E	10+97.18	13+01.49

CONSTRUCTION BASELINE B					
CURVE NUMBER	CURVE LENGTH	RADIUS	LINE/CHORD DIRECTION	PC STATION	PT STATION
C3	104.985	155.000	N0° 51' 46.39"E	0+70.30	1+75.28

SCALE (FEET)
0 20 40 80 160
1 INCH =40 FT

ZONING INFORAMTION TABLE:

ZONING CRITERIA	REQUIRED	EXIST. LOT 13	PROPOSED (27 LOTS)
ZONING DISTRICT	R3	R3	R3
MINIMUM LOT AREA	7,000 SF	313,812 SF	> 7,000 SF
MINIMUM LOT FRONTAGE	70'	115'	> 70'
MIN. FRONT YARD SETBACK	20'	51.8'	> 20'
MIN. SIDE YARD SETBACK	10'	48'	> 10'
MIN. REAR YARD SETBACK	25'	1,080.5'	> 25'
MAXIMUM BUILDING HEIGHT	30'	< 30'	< 30'
MAXIMUM LOT COVERAGE	35%	1%	< 35%

REVISIONS:

NO.	DATE.	DESCRIPTION
1.	8-23-17	City Engineering Review Comments of 8-3-17
2. - 4.	12-17 to 5-19	RIDEM and RIDOT Review Comments of 11-20 -17, 11-30-17 and 5-8-18
5.	3-1-19	Roadway Profile Modification

DESIGNED BY: DMD
CHECKED BY: DMD
DATE: 7-1-17
PROJECT NO: 15-0001-11

SAPPHIRE ESTATES
MAJOR SUBDIVISION OF LAND PROJECT
MAP B6, LOTS 38-13 & 38-524
DIAMOND HILL ROAD AND WILCOX STREET
WOONSOCKET, RHODE ISLAND

DAVID M. D'AMICO No. 6749 REGISTERED PROFESSIONAL ENGINEER CIVIL
3/1/19

D'AMICO ENGINEERING TECHNOLOGY, INC.
Civil · Transportation · Land Use
2080 Mineral Spring Ave., North Providence, RI 02911
(401) 622-1470 (401) 353-1190 fax www.dengineeringtec.com

MODIFIED CONSTRUCTION PLANS

SITE PLAN

SHEET 7 OF 15

N:\D'Amico Engineering Technology, Inc\15-0001 Marc N Nyberg\11 Diamond Hill Rd Subdivision\Sapphire Estates Subdivision Construction Plans MOD 3-1-19.dwg Mar. 02, 2019 3:47pm

NOTE:
THE LOCATION AND DEPTHS OF EXISTING UTILITIES ARE APPROXIMATE AND HAVE BEEN PLOTTED FROM THE LATEST AVAILABLE INFORMATION. THE UTILITY LOCATIONS ARE APPROXIMATE AND MAY NOT BE ALL INCLUSIVE. THE CONTRACTOR SHALL CHECK AND VERIFY THE LOCATION OF ALL EXISTING UTILITIES, BOTH OVERHEAD AND UNDERGROUND, AND "DIG-SAFE" MUST BE NOTIFIED PRIOR TO COMMENCING ANY CONSTRUCTION OPERATIONS. RESTORATION AND REPAIR OF DAMAGE TO EXISTING UTILITIES SHALL BE THE RESPONSIBILITY OF THE CONTRACTOR WITH NO ADDITIONAL COST TO THE OWNER. NO EXCAVATION SHALL COMMENCE UNTIL ALL INVOLVED UTILITY COMPANIES AND/OR TOWN WHOSE FACILITIES MIGHT BE AFFECTED BY ANY WORK TO BE PERFORMED BY THE CONTRACTOR ARE NOTIFIED AT LEAST 72 HOURS IN ADVANCED.

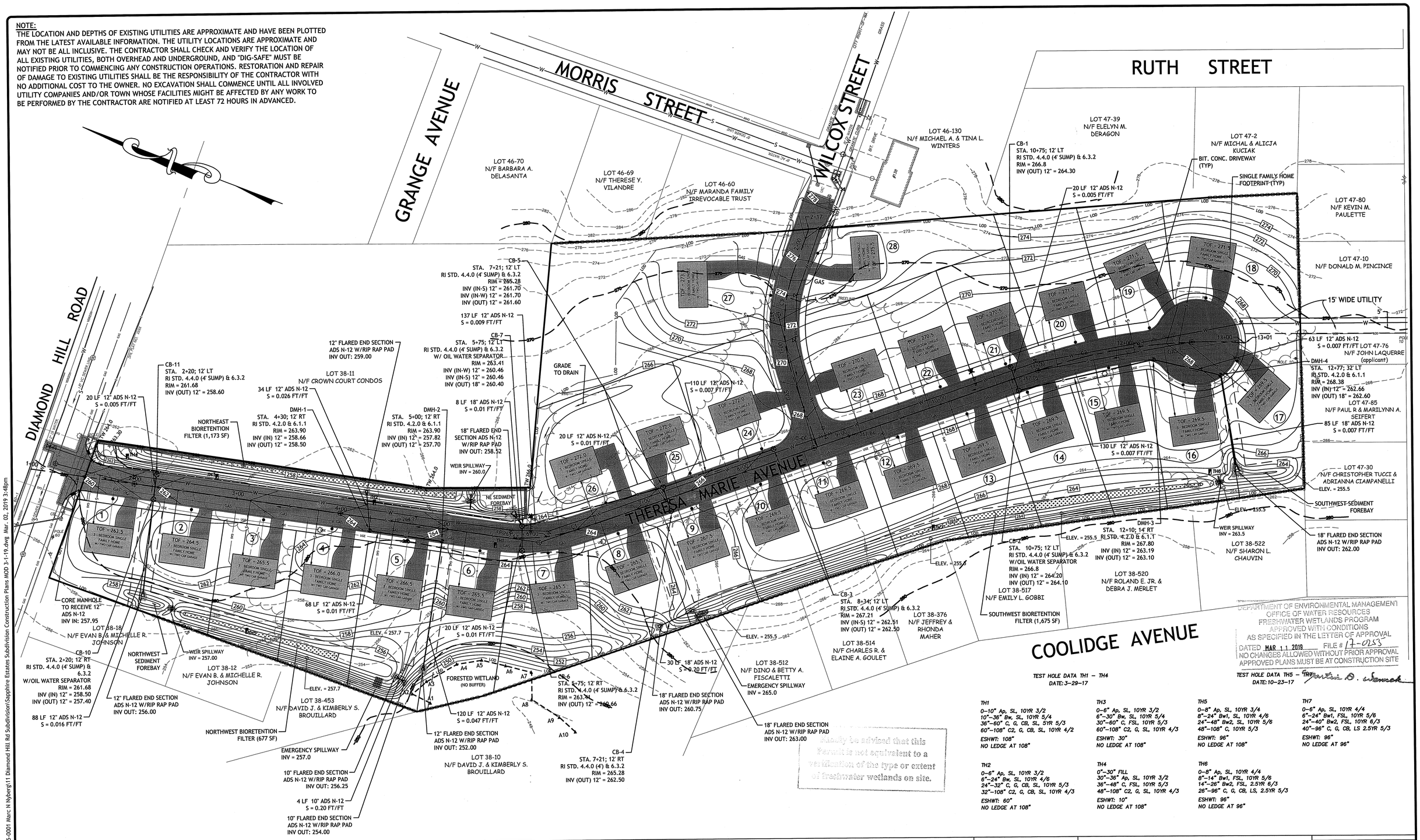

TEST HOLE DATA TH1 – TH4
DATE: 3–29–17

TH1
0–10" Ap, SL, 10YR 3/2
10"–36" Bw, SL, 10YR 5/4
36"–60" C, G, CB, SL, 5YR 5/3
60"–108" C2, G, CB, SL, 10YR 4/2
ESHWT: 108"
NO LEDGE AT 108"

TH2
0–6" Ap, SL, 10YR 3/2
6"–24" Bw, SL, 10YR 4/6
24"–32" C, G, CB, SL, 10YR 5/3
32"–108" C2, G, CB, SL, 10YR 4/3
ESHWT: 60"
NO LEDGE AT 108"

TH3
0–6" Ap, SL, 10YR 3/2
6"–30" Bw, SL, 10YR 5/4
30"–60" C, FSL, 10YR 5/3
60"–108" C2, G, SL, 10YR 4/3
ESHWT: 30"
NO LEDGE AT 108"

TH4
0"–30" FILL
30"–36" Ap, SL, 10YR 3/2
36"–48" C, FSL, 10YR 5/3
48"–108" C2, G, SL, 10YR 4/3
ESHWT: 10"
NO LEDGE AT 108"

TH5
0–8" Ap, SL, 10YR 3/4
8"–24" Bw1, SL, 10YR 4/6
24"–48" Bw2, SL, 10YR 5/6
48"–108" C, 10YR 5/3
ESHWT: 96"
NO LEDGE AT 108"

TH6
0–8" Ap, SL, 10YR 4/4
8"–14" Bw1, FSL, 10YR 5/6
14"–26" Bw2, FSL, 2.5YR 6/3
26"–96" C, G, CB, LS, 2.5YR 5/3
ESHWT: 96"
NO LEDGE AT 96"

TH7
0–6" Ap, SL, 10YR 4/4
6"–24" Bw1, FSL, 10YR 5/6
24"–40" Bw2, FSL, 10YR 6/3
40"–96" C, G, CB, LS 2.5YR 5/3
ESHWT: 96"
NO LEDGE AT 96"

TEST HOLE DATA TH5 – TH7
DATE: 10–23–17

DEPARTMENT OF ENVIRONMENTAL MANAGEMENT
OFFICE OF WATER RESOURCES
FRESHWATER WETLANDS PROGRAM
APPROVED WITH CONDITIONS
AS SPECIFIED IN THE LETTER OF APPROVAL
DATED MAR 11 2019 FILE # 17-0153
NO CHANGES ALLOWED WITHOUT PRIOR APPROVAL
APPROVED PLANS MUST BE AT CONSTRUCTION SITE

Kindly be advised that this Permit is not equivalent to a verification of the type or extent of freshwater wetlands on site.

SCALE (FEET)
0 20 40 80 160
1 INCH = 40 FT

1-888-DIG-SAFE
PROTECT YOURSELF, GIVE 72 HOURS NOTICE

LOCATION OF EXISTING UTILITIES SHOWN, ARE FROM GATE LOCATION AND EXISTING DOCUMENTATION AND MAY NOT BE ACCURATE. EXACT LOCATION TO BE DONE BY THE APPROPRIATE UTILITY COMPANY OR MUNICIPALITY PRIOR TO ANY EXCAVATION CALL DIGSAFE AT 1-888-DIG-SAFE 1-888-344-7233

REVISIONS:

NO.	DATE.	DESCRIPTION
1.	8-23-17	City Engineering Review Comments of 8-3-17
2. - 4.	12-17 to 5-19	RIDEM and RIDOT Review Comments of 11-20 -17, 11-30-17 and 5-8-18
5.	3-1-19	Roadway Profile Modification

DESIGNED BY:	DMD
CHECKED BY:	DMD
DATE:	7-1-17
PROJECT NO:	15-0001-11

SAPPHIRE ESTATES

MAJOR SUBDIVISION OF LAND PROJECT

MAP B6, LOTS 38-13 & 38-524
DIAMOND HILL ROAD AND WILCOX STREET
WOONSOCKET, RHODE ISLAND

DAVID M. D'AMICO No. 6749 REGISTERED PROFESSIONAL ENGINEER CIVIL
3/1/19

DEtec.
D'AMICO ENGINEERING TECHNOLOGY, INC.
Civil · Transportation · Land Use
2080 Mineral Spring Ave., North Providence, RI 02911
(401) 622-1470 (401) 353-1190 fax www.dengineeringtec.com

MODIFIED CONSTRUCTION PLANS

GRADING AND DRAINAGE PLAN

SHEET 8 OF 15

N:\D'Amico Engineering Technology, Inc\15-0001 Marc N Nyberg\11 Diamond Hill Rd Subdivision\Sapphire Estates Subdivision Construction Plans MOD 3-1-19.dwg Mar. 02, 2019 3:48pm

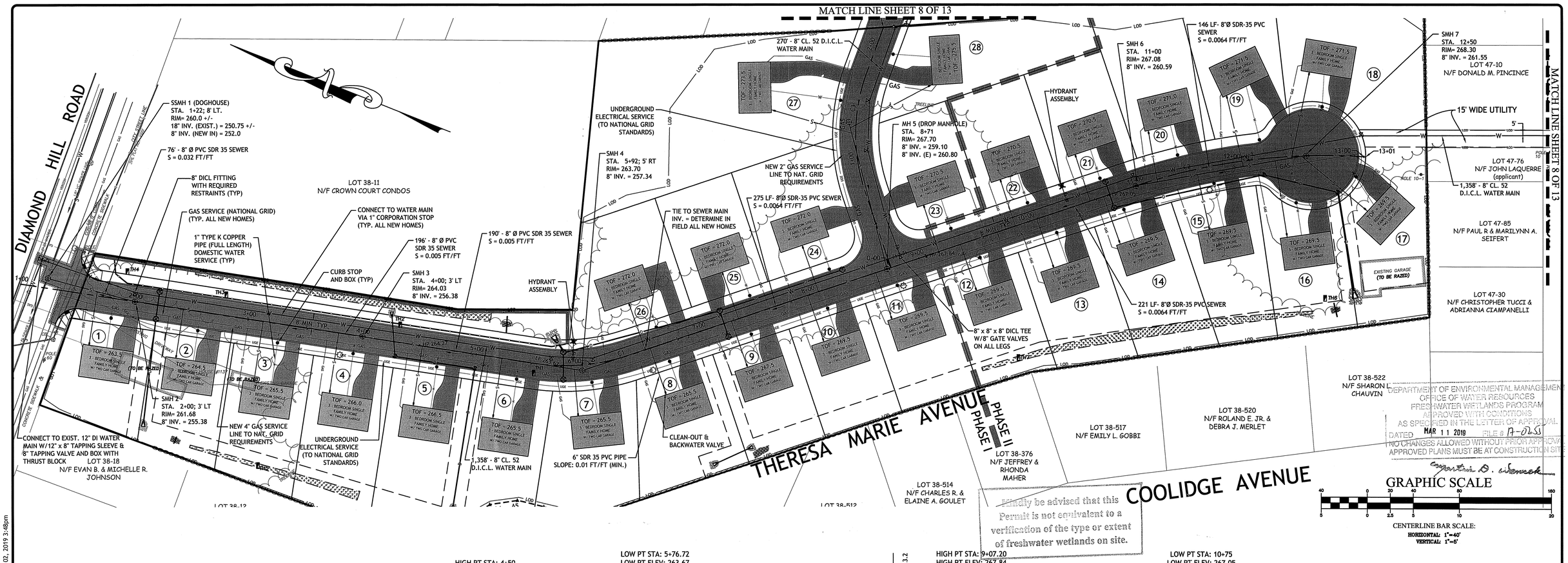

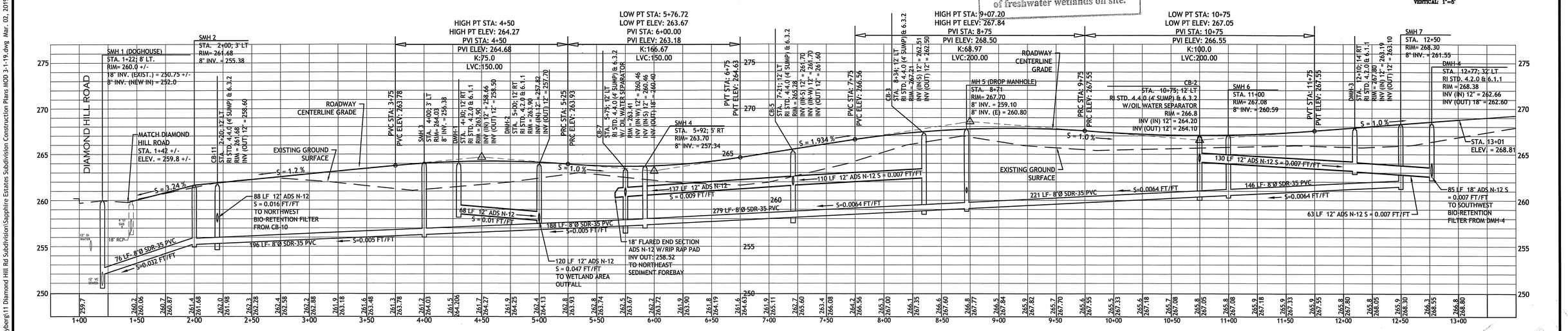

THERESA MARIE AVENUE PROFILE VIEW

1-888-DIG-SAFE
PROTECT YOURSELF, GIVE 72 HOURS NOTICE

LOCATION OF EXISTING UTILITIES SHOWN, ARE FROM GATE LOCATION AND EXISTING DOCUMENTATION AND MAY NOT BE ACCURATE. EXACT LOCATION TO BE DONE BY THE APPROPRIATE UTILITY COMPANY OR MUNICIPALITY PRIOR TO ANY EXCAVATION CALL DICSAFE AT 1-888-DIG-SAFE 1-888-344-7233

REVISIONS:

NO.	DATE.	DESCRIPTION
1.	8-23-17	City Engineering Review Comments of 8-3-17
2. - 4.	12-17 to 5-19	RIDEM and RIDOT Review Comments of 11-20 -17, 11-30-17 and 5-8-18
5.	3-1-19	Roadway Profile Modification

DESIGNED BY: DMD
CHECKED BY: DMD
DATE: 7-1-17
PROJECT NO: 15-0001-11

SAPPHIRE ESTATES

MAJOR SUBDIVISION OF LAND PROJECT

MAP B6, LOTS 38-13 & 38-524
DIAMOND HILL ROAD AND WILCOX STREET
WOONSOCKET, RHODE ISLAND

DAVID M. D'AMICO
No. 6749
REGISTERED PROFESSIONAL ENGINEER
CIVIL
3/1/19

D'AMICO ENGINEERING TECHNOLOGY, INC.
Civil · Transportation · Land Use
2080 Mineral Spring Ave., North Providence, RI 02911
(401) 622-1470 (401) 353-1190 fax www.dengineeringtec.com

MODIFIED CONSTRUCTION PLANS

PLAN AND PROFILE PLAN NO. 1

SHEET 9 OF 15

N:\D'Amico Engineering Technology, Inc\15-0001 Marc N Nyberg\11 Diamond Hill Rd Subdivision\Sapphire Estates Subdivision Construction Plans MOD 3-1-19.dwg Mar. 02, 2019 3:48pm

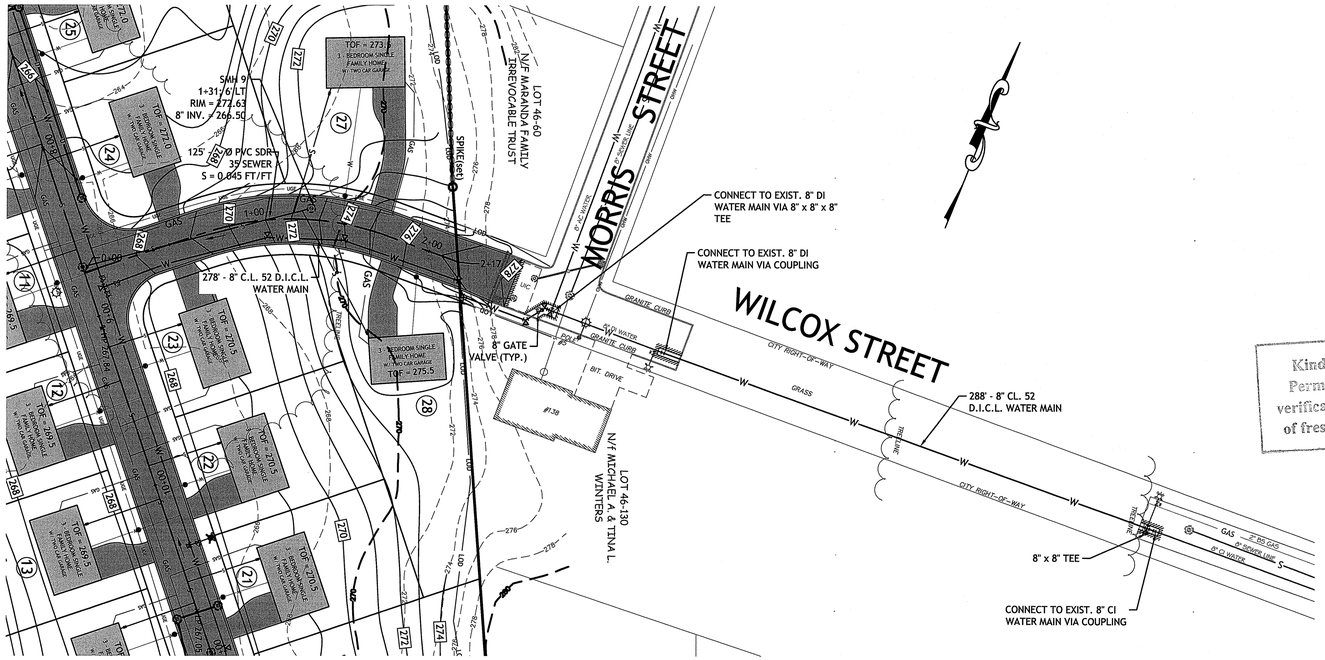

Kindly be advised that this Permit is not equivalent to a verification of the type or extent of freshwater wetlands on site.

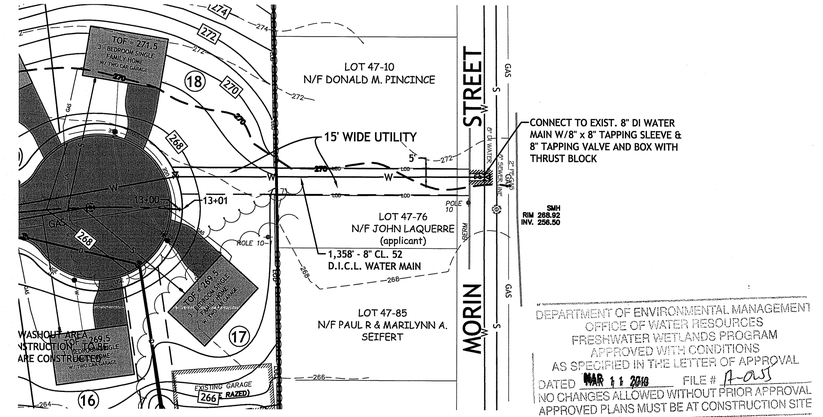

DEPARTMENT OF ENVIRONMENTAL MANAGEMENT
OFFICE OF WATER RESOURCES
FRESHWATER WETLANDS PROGRAM
APPROVED WITH CONDITIONS
AS SPECIFIED IN THE LETTER OF APPROVAL
DATED MAR 11 2019 FILE # A-055
NO CHANGES ALLOWED WITHOUT PRIOR APPROVAL
APPROVED PLANS MUST BE AT CONSTRUCTION SITE

MORIN STREET WATER MAIN TIE IN DETAIL

SCALE: 1" = 40'

GRAPHIC SCALE

40 0 20 40 80 160

5 0 2.5 5 10 20

CENTERLINE BAR SCALE:
HORIZONTAL: 1"=40'
VERTICAL: 1"=5'

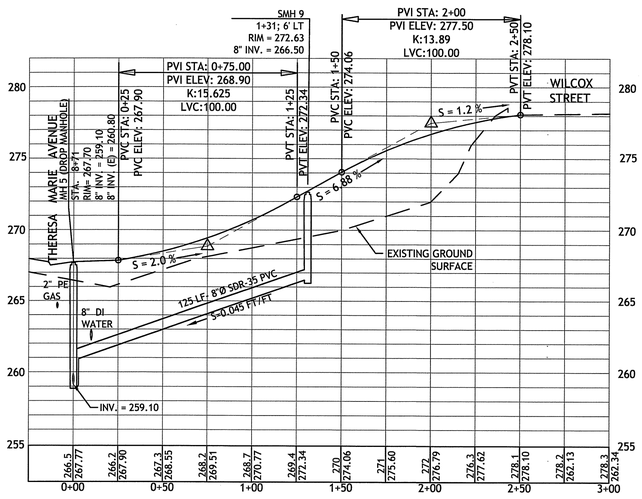

WILCOX STREET EXTENSION PROFILE VIEW

NOTE:
ALL TRAFFIC CONTROLS SHALL BE IN CONFORMANCE WITH THE LATEST REVISIONS OF MANUAL OF UNIFORM TRAFFIC CONTROL DEVICES (M.U.T.C.D.), 2009 EDITION, INCLUDING ALL REVISIONS.

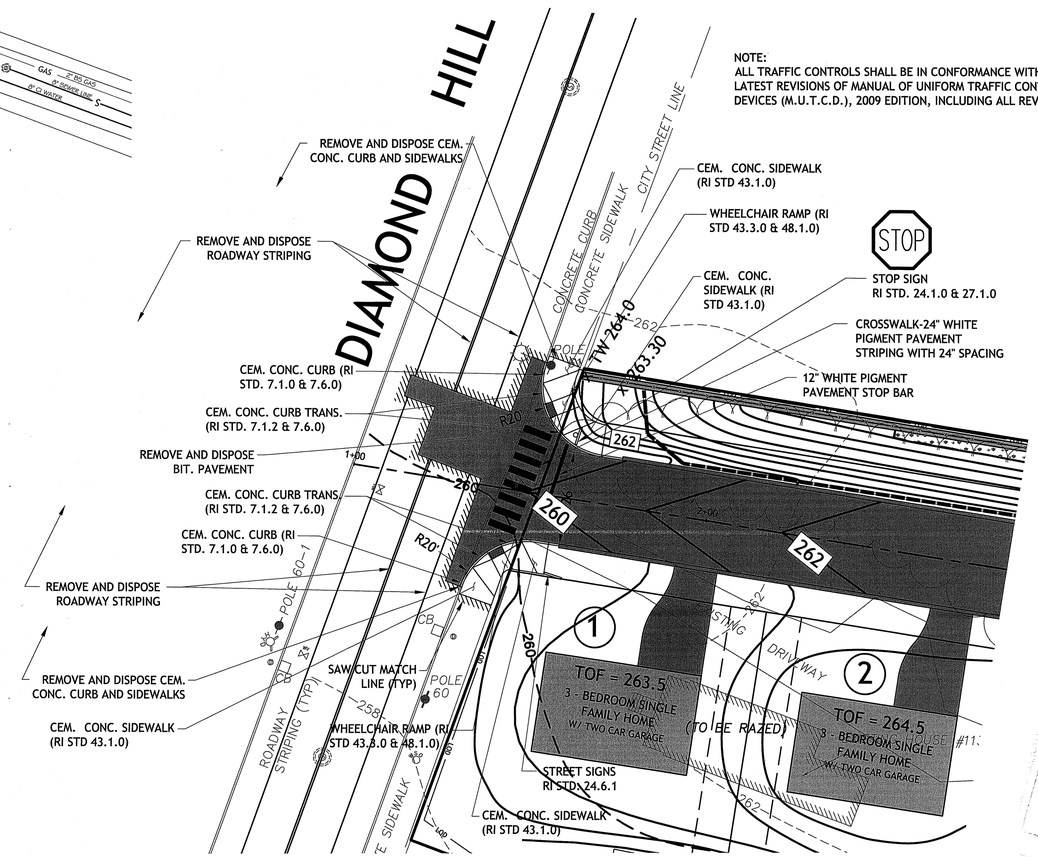

ROADWAY INTERSECTION DETAIL (RIDOT)

SCALE: 1" = 20'

MAR 4 2019

1-888-DIG-SAFE
PROTECT YOURSELF, GIVE 72 HOURS NOTICE

LOCATION OF EXISTING UTILITIES SHOWN, ARE FROM GATE LOCATION AND EXISTING DOCUMENTATION AND MAY NOT BE ACCURATE. EXACT LOCATION TO BE DONE BY THE APPROPRIATE UTILITY COMPANY OR MUNICIPALITY PRIOR TO ANY EXCAVATION CALL DIGSAFE AT 1-888-DIG-SAFE 1-888-344-7233

REVISIONS:

NO.	DATE.	DESCRIPTION
1.	8-23-17	City Engineering Review Comments of 8-3-17
2. - 4.	12-17 to 5-19	RIDEM and RIDOT Review Comments of 11-20 -17, 11-30-17 and 5-8-18
5.	3-1-19	Roadway Profile Modification

DESIGNED BY:	DMD
CHECKED BY:	DMD
DATE:	7-1-17
PROJECT NO:	15-0001-11

SAPPHIRE ESTATES

MAJOR SUBDIVISION OF LAND PROJECT

MAP B6, LOTS 38-13 & 38-524
DIAMOND HILL ROAD AND WILCOX STREET
WOONSOCKET, RHODE ISLAND

DAVID M. D'AMICO
No. 6749
REGISTERED PROFESSIONAL ENGINEER CIVIL
3/1/19

D'AMICO ENGINEERING TECHNOLOGY, INC.
Civil · Transportation · Land Use
2080 Mineral Spring Ave., North Providence, RI 02911
(401) 622-1470 (401) 353-1190 fax www.dengineeringtec.com

MODIFIED CONSTRUCTION PLANS

PLAN AND PROFILE PLAN NO. 2

SHEET 10 OF 15

N:\D'Amico Engineering Technology, Inc\15-0001 Marc N Nyberg\11 Diamond Hill Rd Subdivision\Sapphire Estates Subdivision Construction Plans MOD 3-1-19.dwg Mar. 02, 2019 3:49pm

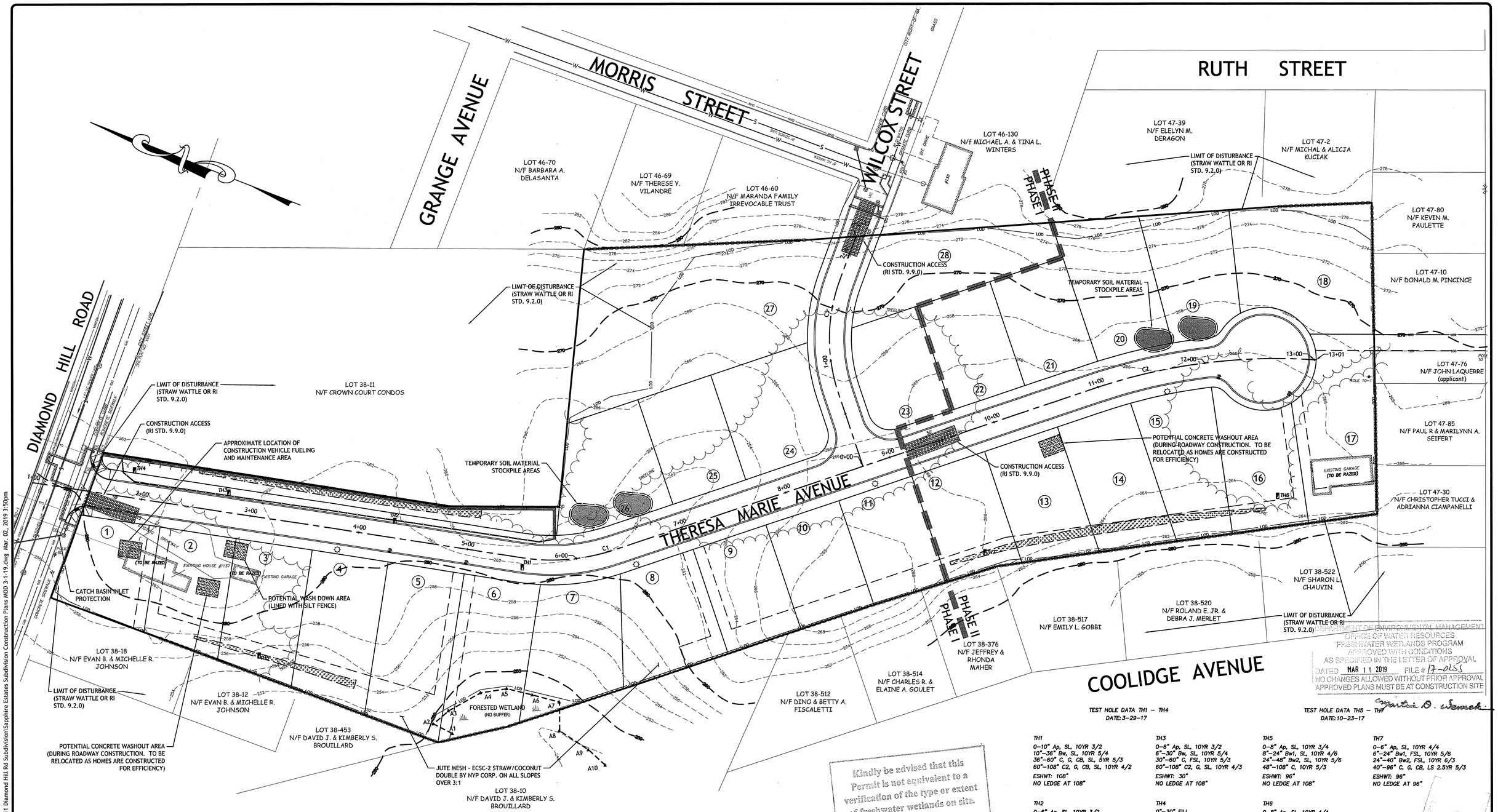

Kindly be advised that this Permit is not equivalent to a verification of the type or extent of freshwater wetlands on site.

DEPARTMENT OF ENVIRONMENTAL MANAGEMENT
OFFICE OF WATER RESOURCES
FRESHWATER WETLANDS PROGRAM
APPROVED WITH CONDITIONS
AS SPECIFIED IN THE LETTER OF APPROVAL
DATED MAR 11 2019 FILE # 17-0255
NO CHANGES ALLOWED WITHOUT PRIOR APPROVAL
APPROVED PLANS MUST BE AT CONSTRUCTION SITE
Christopher D. Woodcock

TEST HOLE DATA TH1 – TH4
DATE: 3–29–17

TH1
0–10" Ap, SL, 10YR 3/2
10"–36" Bw, SL, 10YR 5/4
36"–60" C, G, CB, SL, 5YR 5/3
60"–108" C2, G, CB, SL, 10YR 4/2
ESHWT: 108"
NO LEDGE AT 108"

TH2
0–6" Ap, SL, 10YR 3/2
6"–24" Bw, SL, 10YR 4/6
24"–32" C, G, CB, SL, 10YR 5/3
32"–108" C2, G, CB, SL, 10YR 4/3
ESHWT: 60"
NO LEDGE AT 108"

TH3
0–6" Ap, SL, 10YR 3/2
6"–30" Bw, SL, 10YR 5/4
30"–60" C, FSL, 10YR 5/3
60"–108" C2, G, SL, 10YR 4/3
ESHWT: 30"
NO LEDGE AT 108"

TH4
0"–30" FILL
30"–36" Ap, SL, 10YR 3/2
36"–48" C, FSL, 10YR 5/3
48"–108" C2, G, SL, 10YR 4/3
ESHWT: 10"
NO LEDGE AT 108"

TEST HOLE DATA TH5 – TH7
DATE: 10–23–17

TH5
0–8" Ap, SL, 10YR 3/4
8"–24" Bw1, SL, 10YR 4/6
24"–48" Bw2, SL, 10YR 5/6
48"–108" C, 10YR 5/3
ESHWT: 96"
NO LEDGE AT 108"

TH6
0–8" Ap, SL, 10YR 4/4
8"–14" Bw1, FSL, 10YR 5/6
14"–26" Bw2, FSL, 2.5YR 6/3
26"–96" C, G, CB, LS, 2.5YR 5/3
ESHWT: 96"
NO LEDGE AT 96"

TH7
0–6" Ap, SL, 10YR 4/4
6"–24" Bw1, FSL, 10YR 5/6
24"–40" Bw2, FSL, 10YR 6/3
40"–96" C, G, CB, LS 2.5YR 5/3
ESHWT: 96"
NO LEDGE AT 96"

SCALE (SHEET)
0 10 20 40 80 160
0 20 40 80 160
1 INCH = 40 FT

1–888–DIG–SAFE
PROTECT YOURSELF, GIVE 72 HOURS NOTICE

LOCATION OF EXISTING UTILITIES SHOWN, ARE FROM GATE LOCATION AND EXISTING DOCUMENTATION AND MAY NOT BE ACCURATE. EXACT LOCATION TO BE DONE BY THE APPROPRIATE UTILITY COMPANY OR MUNICIPALITY PRIOR TO ANY EXCAVATION CALL *DIGSAFE* AT *1–888–DIG–SAFE* *1–888–344–7233*

REVISIONS:

NO.	DATE	DESCRIPTION
1.	8-23-17	City Engineering Review Comments of 8-3-17
2. - 4.	12-17 to 5-19	RIDEM and RIDOT Review Comments of 11-20 -17, 11-30-17 and 5-8-18
5.	3-1-19	Roadway Profile Modification

DESIGNED BY:	DMD
CHECKED BY:	DMD
DATE:	7-1-17
PROJECT NO:	15-0001-11

SAPPHIRE ESTATES
MAJOR SUBDIVISION OF LAND PROJECT
MAP B6, LOTS 38-13 & 38-524
DIAMOND HILL ROAD AND WILCOX STREET
WOONSOCKET, RHODE ISLAND

DAVID M. D'AMICO
No. 6749
REGISTERED PROFESSIONAL ENGINEER
CIVIL
3/1/19

DEtec.
D'AMICO ENGINEERING TECHNOLOGY, INC.
Civil · Transportation · Land Use
2080 Mineral Spring Ave., North Providence, RI 02911
(401) 622-1470 (401) 353-1190 fax www.dengineeringtec.com

MODIFIED CONSTRUCTION PLANS

SOIL EROSION AND SEDIMENT CONTROL PLAN

SHEET 11 OF 15

N:\D'Amico Engineering Technology, Inc\15-0001 Marc N Nyberg\11 Diamond Hill Rd Subdivision\Sapphire Estates Subdivision Construction Plans MOD 3-1-19.dwg Mar. 02, 2019 3:50pm

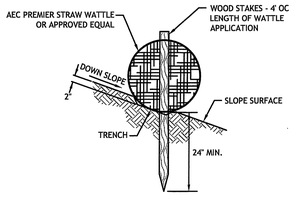

STRAW WATTLE STAKE DETAIL ON SOIL

N.T.S.

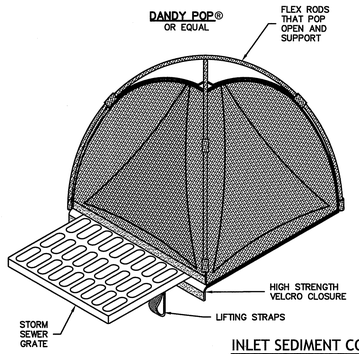

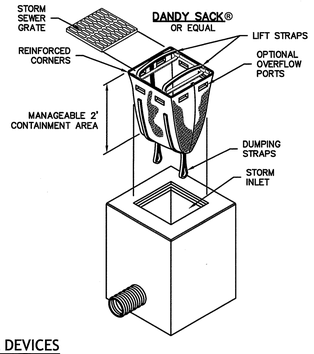

INLET SEDIMENT CONTROL DEVICES

NOT TO SCALE

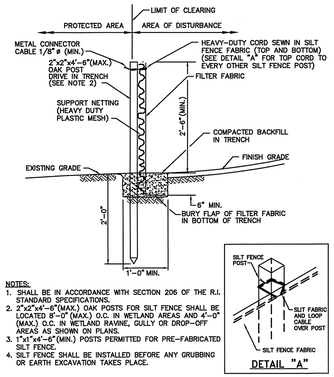

NOTES:
1. SHALL BE IN ACCORDANCE WITH SECTION 206 OF THE R.I. STANDARD SPECIFICATIONS.
2. 2"x2"x4'-6"(MAX.) OAK POSTS FOR SILT FENCE SHALL BE LOCATED 8'-0" (MAX.) O.C. IN WETLAND AREAS AND 4'-0" (MAX.) O.C. IN WETLAND RAVINE, GULLY OR DROP-OFF AREAS AS SHOWN ON PLANS.
3. 1"x1"x4'-6"(MIN.) POSTS PERMITTED FOR PRE-FABRICATED SILT FENCE.
4. SILT FENCE SHALL BE INSTALLED BEFORE ANY GRUBBING OR EARTH EXCAVATION TAKES PLACE.

694 **SILT FENCE DETAIL** R.I. STANDARD 9.2.0

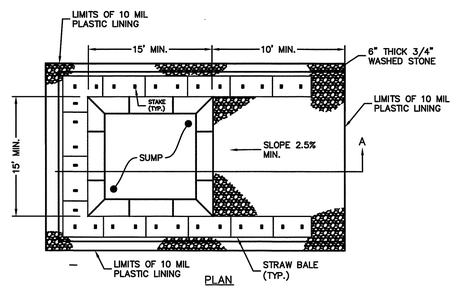

PLAN

WASHOUT SIGN

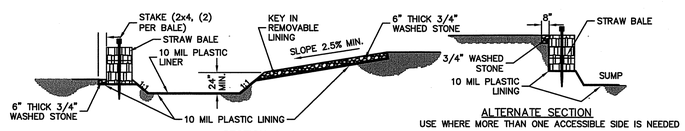

SECTION A–A

ALTERNATE SECTION
USE WHERE MORE THAN ONE ACCESSIBLE SIDE IS NEEDED

NOTES:

1. PIT IS SPECIFICALLY DESIGNATED, DIKED AND CONTAINED TO PREVENT CONTACT BETWEEN CONCRETE WASH AND STORMWATER.
2. WASH WATER SHALL NOT BE ALLOWED TO FLOW TO SURFACE WATER.
3. FACILITY MUST HOLD SUFFICIENT VOLUME TO CONTAIN CONCRETE WASTE WITH A MINIMUM FREEBOARD OF 12."
4. FACILITY SHALL NOT BE FILLED BEYOND 12" OF FREEBOARD UNLESS A NEW FACILITY IS CONSTRUCTED. WASHOUT AREA SHALL BE EMPTIED AT THIS TIME AND DISPOSED OF IN ACCORDANCE WITH ALL REGULATIONS.
5. SAW CUT PORTLAND CEMENT CONCRETE, RESIDUE FROM SAWCUT & GRINDING TO BE DISPOSED OF IN THE PIT.
6. CONCRETE WASHOUTS SHALL BE LOCATED A MINIMUM OF 100' FROM DRAINAGE WAYS, INLETS, & SURFACE WATERS.
7. MANUFACTURED CONCRETE WASHOUT DEVICES MAY BE USED IF REMOVED FROM THE SITE WHEN AT 95% FULL CAPACITY.

CONCRETE WASHOUT AREA

(NOT TO SCALE)

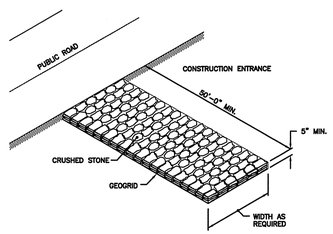

NOTE: SHALL BE IN ACCORDANCE WITH SECTION 211 OF THE R.I. STANDARD SPECIFICATIONS.

CONSTRUCTION ACCESS R.I. STANDARD 9.9.0

N.T.S.

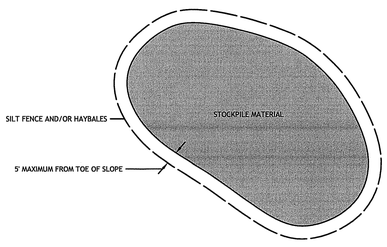

STOCKPILE DETAIL

N.T.S.

SOIL EROSION AND SEDIMENTATION CONTROL NOTES

1. THE HAYBALE, WATTLE AND SILT FENCE LINE ILLUSTRATED ON THESE PLANS SHALL SERVE AS THE STRICT LIMIT OF DISTURBANCE FOR THE PROJECT WITHIN OR ADJACENT TO REGULATED FRESHWATER WETLAND AREAS.
2. THE LIMITS OF CLEARING, GRADING, AND DISTURBANCE SHALL BE KEPT TO A MINIMUM WITHIN THE PROPOSED AREA OF CONSTRUCTION. ALL AREAS OUTSIDE OF THESE LIMITS, AS DEPICTED ON THE PLAN SHALL BE TOTALLY UNDISTURBED, TO REMAIN IN NATURAL CONDITION.
3. ALL CATCH BASINS AND CULVERTS SHALL BE PROTECTED WITH STAKED HAYBALES (R.I. STD. 9.8.0) DURING CONSTRUCTION ACTIVITIES. ALL PROPOSED STORM WATER DISCHARGE AREAS SHALL BE LINED WITH A RIPRAP SPLASH PAD AND PROTECTED WITH STAKED HAYBALE OUTLET PROTECTION (R.I. STD. 9.1.0), OR STAKED HAYBALE WITH SILT FENCE (R.I. STD. 9.3.0) SHALL ALSO BE INSTALLED AT ALL EXISTING STORMWATER DISCHARGE LOCATIONS WHERE DISTRIBUTING PIPES, CATCH BASINS, AND MANHOLES ARE TO BE CLEANED AND FLUSHED.
4. ALL DISTURBED SLOPES EITHER NEWLY CREATED OR CURRENTLY EXPOSED SHALL BE SEEDED, PROTECTED AND MAINTAINED BY THE CONTRACTOR. THE CONTRACTOR SHALL REGULARLY CHECK ALL SEEDED AREAS TO ENSURE THAT A GOOD STAND IS MAINTAINED.
5. ALL HAYBALES, TEMPORARY TREATMENT (HAY, STRAW, ETC.) AND TEMPORARY EROSION PROTECTION SHALL BE MAINTAINED BY THE CONTRACTOR THROUGHOUT CONSTRUCTION AND SHALL REMAIN IN PLACE UNTIL AN ACCEPTABLE STAND OF GRASS OR APPROVED GROUND COVER IS ESTABLISHED.
6. STOCKPILES OF TOPSOIL SHALL NOT BE LOCATED NEAR WATERWAYS. THEY SHALL HAVE SIDE SLOPES OF NO GREATER THAN 2:1 AND SHALL BE TEMPORARILY SEEDED AND/OR STABILIZED PER CONTRACT SPECIFICATIONS.
7. THE HAYBALES SHALL BE CHECKED BY THE CONTRACTOR ON A WEEKLY BASIS AND AFTER EACH STORM FOR UNDERMINING OR DETERIORATION. THE CONTRACTOR SHALL REPAIR OR REPLACE ANY HAYBALES AS NEEDED. THE CONTRACTOR SHALL CLEAN THE ACCUMULATED SEDIMENT IF HALF OF THE ORIGINAL HEIGHT OF THE HAY-BALES BECOMES FILLED WITH SEDIMENTS.
8. IT SHALL BE THE RESPONSIBILITY OF THE CONTRACTOR TO MAINTAIN ALL SOIL EROSION AND SEDIMENT CONTROLS ON THE PROJECT SITE FOR THE ENTIRE DURATION OF THE CONSTRUCTION PERIOD. THE CONTRACTOR SHALL FOLLOW THE DIRECTION OF THE ENGINEER OR OWNER'S REPRESENTATIVE WITH REGARD TO INSTALLATION, MAINTENANCE, AND REPAIR OF ALL SOIL EROSION AND SEDIMENTATION CONTROLS ON THE PROJECT SITE. TEMPORARY SOIL EROSION AND SEDIMENTATION CONTROLS (HAYBALES, SILT FENCE, ETC.) SHALL BE MAINTAINED UNTIL ALL EXPOSED SOILS ARE SATISFACTORILY STABILIZED. THE CONTRACTOR SHALL BE RESPONSIBLE FOR REPAIRING AND/OR RESEEDING ALL AREAS THAT DO NOT DEVELOP WITHIN ONE YEAR FROM THE COMPLETION OF CONSTRUCTION.
9. ALL REFERENCED SOIL EROSION AND SEDIMENTATION CONTROLS INCLUDING MATERIALS USED, APPLICATION RATES AND THE INSTALLATION PROCEDURES SHALL BE PERFORMED PER THE "RHODE ISLAND EROSION AND SEDIMENTATION HANDBOOK", DATED 1989, REVISED 2014.

Kindly be advised that this Permit is not equivalent to a verification of the type or extent of freshwater wetlands on site.

BMP MAINTENANCE SCHEDULE

1. ALL MAINTENANCE (INCLUDING CLEANING) REQUIRED DURING THE CONSTRUCTION PHASE OF THE PROJECT SHALL BE THE RESPONSIBILITY OF THE CONTRACTOR.
2. CONSTRUCTION EQUIPMENT AND TRAFFIC SHALL BE RESTRICTED FROM TRAVELING OVER THE INFILTRATION TRENCH AND/OR SUBSURFACE CHAMBER AREAS TO MINIMIZE COMPACTION OF THE SOIL.
3. MEASURES NEEDED TO ENSURE THE PROPER OPERATION OF THE STORMWATER DRAINAGE SYSTEMS AND WATER QUALITY CONTROL SYSTEMS TO INCLUDE INSPECTION, CLEANING AND REPAIRS TO ALL PIPES, INTAKE AND DISCHARGE STRUCTURES (INCLUDING RIP-RAP SPLASH PADS), CATCH BASIN SUMPS, AND MANHOLES.
4. INSPECTION OF ALL SLOPES, BERMS, AND OTHER CONTROL STRUCTURES (INCLUDING ROADWAY SIDE SLOPES, FOR STRUCTURAL INTEGRITY, STABILITY AND EVIDENCE OF SOIL EROSION, SHALL INCLUDE MAINTENANCE OF THESE STRUCTURES IF NECESSARY. INSPECTIONS SHALL BE PERFORMED FOLLOWING ALL RAIN EVENTS OF ½ INCH RAINFALL OR MORE IN A 24-HOUR PERIOD, OR BIMONTHLY IF NO RAINFALL EVENT OCCURS.
5. UPON COMPLETION OF PROJECT CONSTRUCTION, AND PRIOR TO VACATING THE SITE, THE CONTRACTOR SHALL CONDUCT A FINAL INSPECTION, REPAIR ANY VEGETATIVE SOIL EROSION AND SEDIMENTATION CONTROL MEASURES, (SEEDING, PLANTING, ETC.) WHERE REQUIRED, AND REPAIR (OR REMOVE WHERE APPROPRIATE) ANY TEMPORARY SOIL EROSION AND SEDIMENTATION CONTROL DEVICES. AFTER PERMANENT SOIL STABILIZATION ON THE ENTIRE SITE HAS OCCURRED, ALL TEMPORARY CONTROL MEASURES MUST BE REMOVED.
6. AFTER THE COMPLETION OF PROJECT CONSTRUCTION AND THE FINAL STABILIZATION OF THE ENTIRE SITE, THE INSPECTION AND MAINTENANCE OF ALL STORMWATER FACILITIES MUST BE PERFORMED.
7. REPLANTING, REGRADING, OR OTHER REPAIRS NEEDED AS A RESULT OF SOIL EROSION AND SEDIMENTATION PROCESSES SHALL BE DONE PROMPTLY TO ENSURE PROPER FUNCTIONING OF THE ENTIRE SYSTEM.
8. ANY TRASH, DEBRIS, ETC. SHOULD BE REMOVED FROM ANY WETLAND AREAS, SWALE, AND PIPE OUTLETS.
9. ALL DISTURBED AREAS WILL BE LOAMED AND SEEDED UNLESS DIRECTED OTHERWISE.

DEPARTMENT OF ENVIRONMENTAL MANAGEMENT
OFFICE OF WATER RESOURCES
FRESHWATER WETLANDS PROGRAM
APPROVED WITH CONDITIONS
AS SPECIFIED IN THE LETTER OF APPROVAL
DATED MAR 11 2019 FILE # 7-0255
NO CHANGES ALLOWED WITHOUT PRIOR APPROVAL
APPROVED PLANS MUST BE AT CONSTRUCTION SITE

MAR

REVISIONS:		
NO.	DATE.	DESCRIPTION
1.	8-23-17	City Engineering Review Comments of 8-3-17
2. - 4.	12-17 to 5-19	RIDEM and RIDOT Review Comments of 11-20 -17, 11-30-17 and 5-8-18
5.	3-1-19	Roadway Profile Modification
DESIGNED BY:	DMD	
CHECKED BY:	DMD	
DATE:	7-1-17	
PROJECT NO:	15-0001-11	

SAPPHIRE ESTATES

MAJOR SUBDIVISION OF LAND PROJECT

MAP B6, LOTS 38-13 & 38-524
DIAMOND HILL ROAD AND WILCOX STREET
WOONSOCKET, RHODE ISLAND

DAVID M. D'AMICO
No. 6749
REGISTERED PROFESSIONAL ENGINEER CIVIL
3/1/19

D'AMICO ENGINEERING TECHNOLOGY, INC.
Civil · Transportation · Land Use
2080 Mineral Spring Ave., North Providence, RI 02911
(401) 622-1470 (401) 353-1190 fax www.dengineeringtec.com

MODIFIED CONSTRUCTION PLANS

SOIL EROSION AND SEDIMENT CONTROL PLAN

N:\D'Amico Engineering Technology, Inc\15-0001 Marc N Nyberg\11 Diamond Hill Rd Subdivision\Sapphire Estates Subdivision Construction Plans MOD 3-1-19.dwg Mar. 02, 2019 3:50pm

NOTE:
1. MINIMUM COMPACTION FOR GRAVEL BORROW SUBBASE OR SUBGRADE TO BE 95% MODIFIED PROCTOR.
2. NO WORK SHOULD BE DONE OUTSIDE OF THE PROJECT SITE. PAVEMENT SHOULD MATCH WHERE NOTED ON THE SITE PLANS.
3. WHEN MATCHING EXISTING PAVEMENT THE LONGITUDINAL CUT AND MATCH SECTION SHOULD NOT EXCEED PAST THE SHOULDER STRIPING.

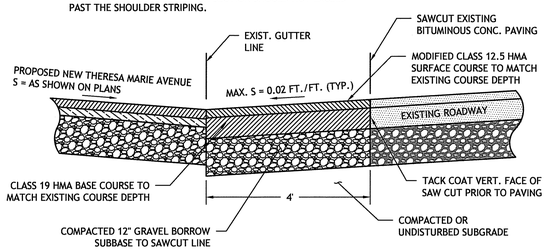

NEW SIDE STREET SAWCUT & MATCH DETAIL

NOT TO SCALE

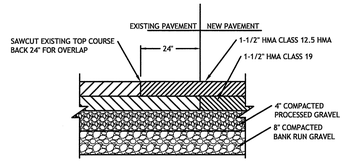

NOTE:
PROVIDE BITUMINOUS TACK COAT AT ALL SAWCUTS.

PAVEMENT CUT & MATCH AT WILCOX STREET

NOT TO SCALE

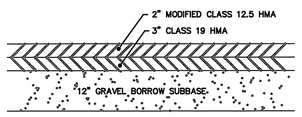

PAVEMENT CROSS SECTION (RIDOT ROW)

NOT TO SCALE

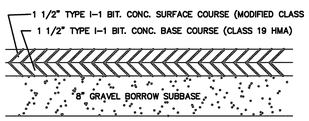

PAVEMENT CROSS SECTION - DRIVEWAYS

NOT TO SCALE

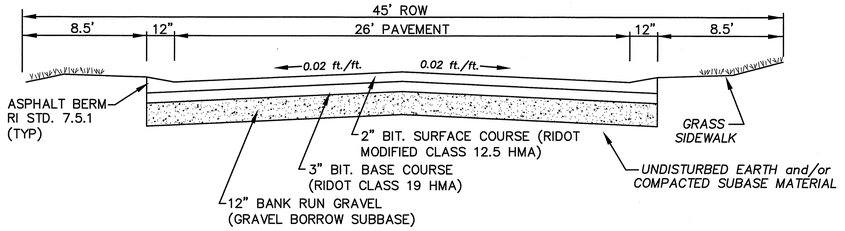

ROADWAY CROSS-SECTION

NOT TO SCALE

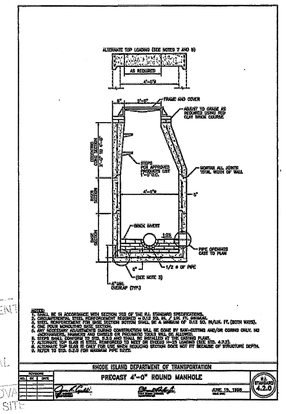

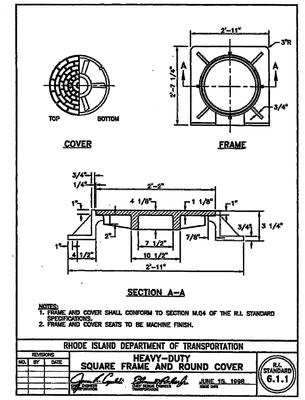

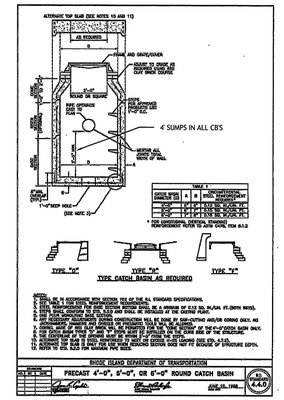

DEPARTMENT OF ENVIRONMENTAL MANAGEMENT
OFFICE OF WATER RESOURCES
FRESHWATER WETLANDS PROGRAM
APPROVED WITH CONDITIONS
AS SPECIFIED IN THE LETTER OF APPROVAL
DATED MAR 11 2019 FILE # 17-055
NO CHANGES ALLOWED WITHOUT PRIOR APPROVAL
APPROVED PLANS MUST BE AT CONSTRUCTION SITE

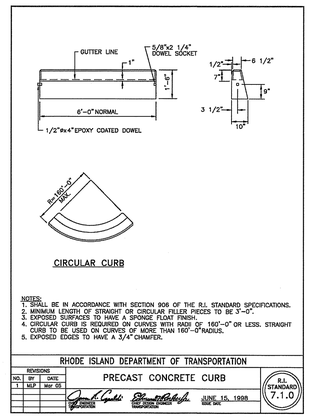

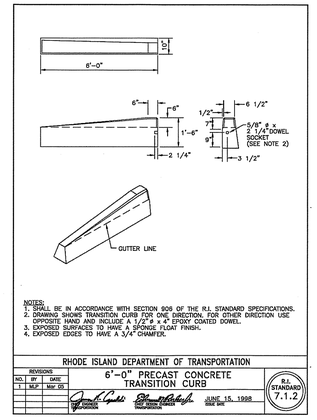

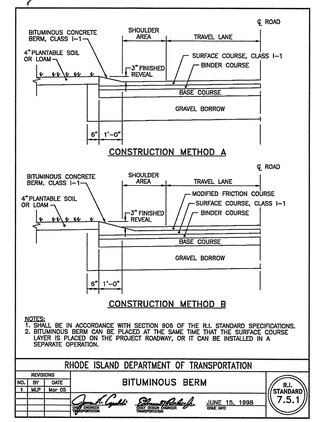

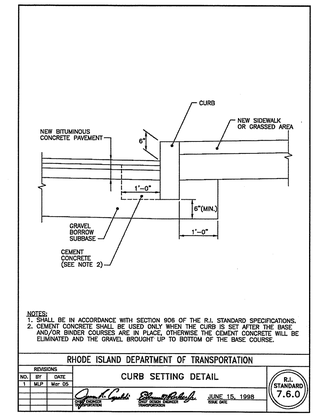

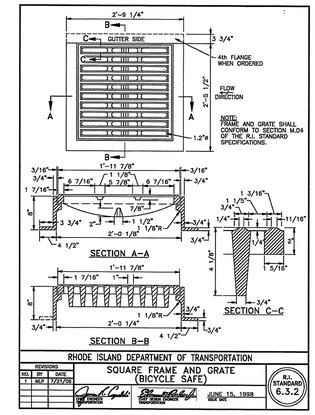

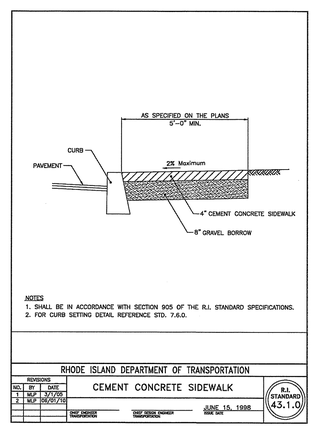

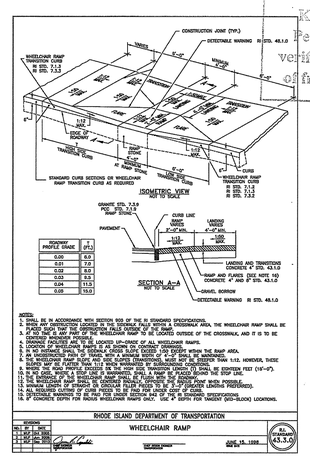

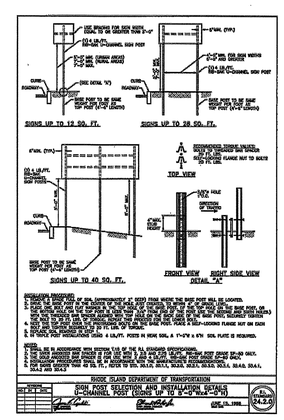

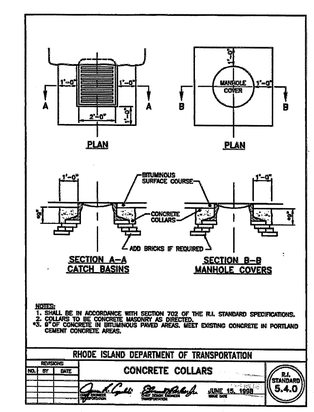

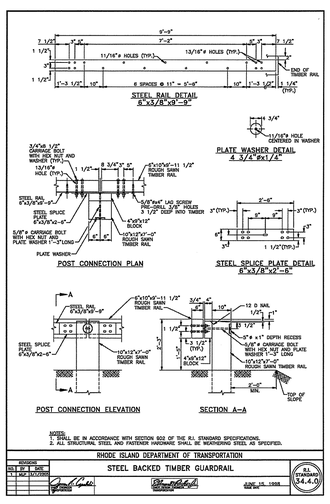

Kindly be advised that this Permit is not equivalent to a verification of the type or extent of freshwater wetlands

REVISIONS:		
NO.	DATE.	DESCRIPTION
1.	8-23-17	City Engineering Review Comments of 8-3-17
2. - 4.	12-17 to 5-19	RIDEM and RIDOT Review Comments of 11-20 -17, 11-30-17 and 5-8-18
5.	3-1-19	Roadway Profile Modification

DESIGNED BY: DMD
CHECKED BY: DMD
DATE: 7-1-17
PROJECT NO: 15-0001-11

SAPPHIRE ESTATES

MAJOR SUBDIVISION OF LAND PROJECT

MAP B6, LOTS 38-13 & 38-524
DIAMOND HILL ROAD AND WILCOX STREET
WOONSOCKET, RHODE ISLAND

DAVID M. D'AMICO No. 6749 REGISTERED PROFESSIONAL ENGINEER CIVIL
3/1/19

DEtec.
D'AMICO ENGINEERING TECHNOLOGY, INC.
Civil · Transportation · Land Use
2080 Mineral Spring Ave., North Providence, RI 02911
(401) 622-1470 (401) 353-1190 fax www.dengineeringtec.com

MODIFIED CONSTRUCTION PLANS

SITE DETAILS NO. 1

SHEET 13 OF 15

N:\D'Amico Engineering Technology, Inc\15-0001 Marc N Nyberg\11 Diamond Hill Rd Subdivision\Sapphire Estates Subdivision Construction Plans MOD 3-1-19.dwg Mar. 02, 2019 3:51pm

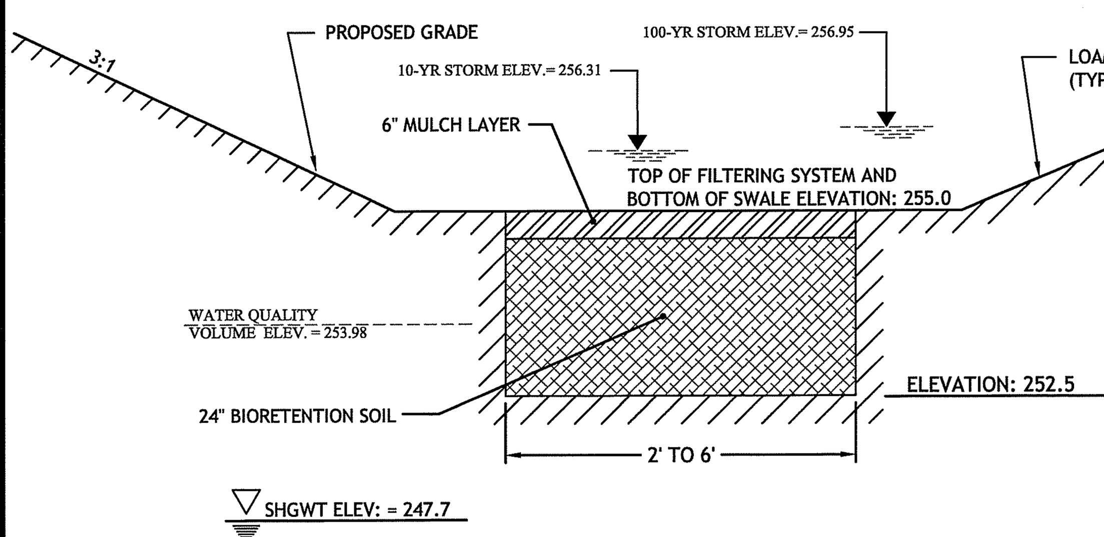

NORTHWEST BIORETENTION FILTER DETAIL SECTION

NOT TO SCALE

BIORETENTION SOIL CHARACTERISTICS

PARAMETER	VALUE
ORGANIC MATTER	3 TO 5%
CLAY*	0 TO 2%
SILT*	0 TO 12%
SAND*	85 TO 88%

* SOIL CHARACTERISTICS. AUGMENT SOILS WITH AGED LEAF COMPOST AND ACCEPTABLE TOPSOIL.

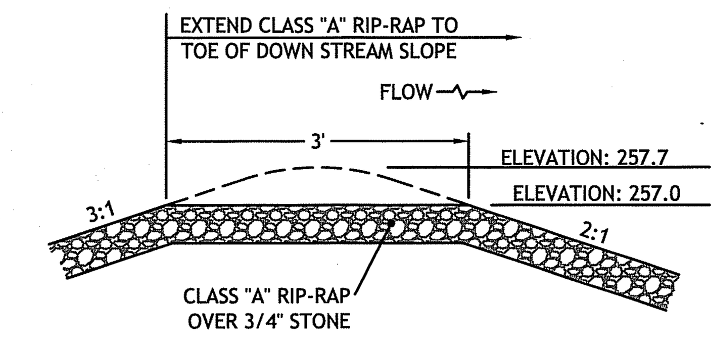

SIDE VIEW

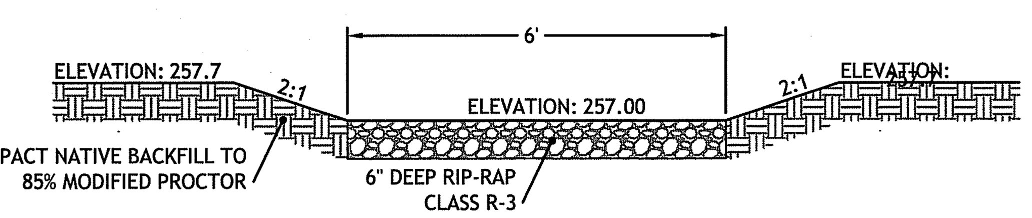

FRONT VIEW

NORTHWEST EMERGENCY SPILLWAY

NOT TO SCALE

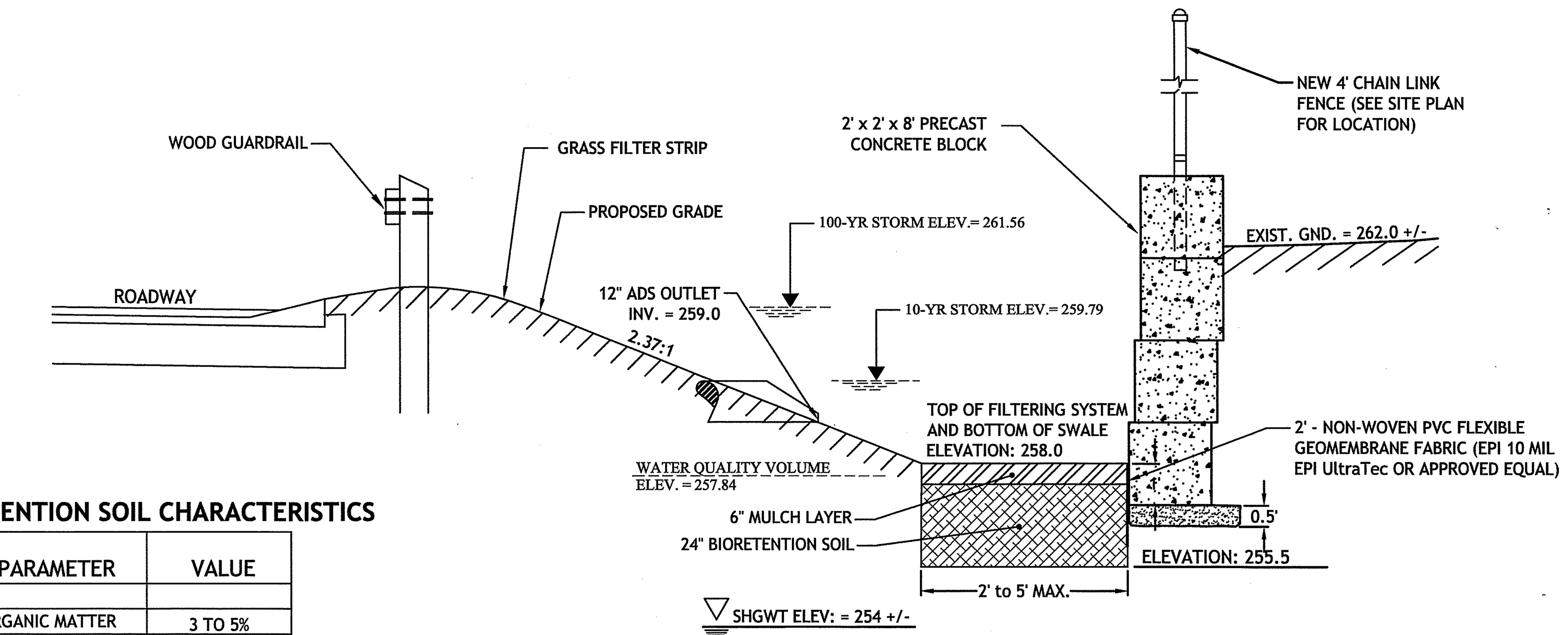

BIORETENTION SOIL CHARACTERISTICS

PARAMETER	VALUE
ORGANIC MATTER	3 TO 5%
CLAY*	0 TO 2%
SILT*	0 TO 12%
SAND*	85 TO 88%

* SOIL CHARACTERISTICS. AUGMENT SOILS WITH AGED LEAF COMPOST AND ACCEPTABLE TOPSOIL.

NORTHEAST BIORETENTION FILTER DETAIL SECTION

SCALE: 1" = 3'

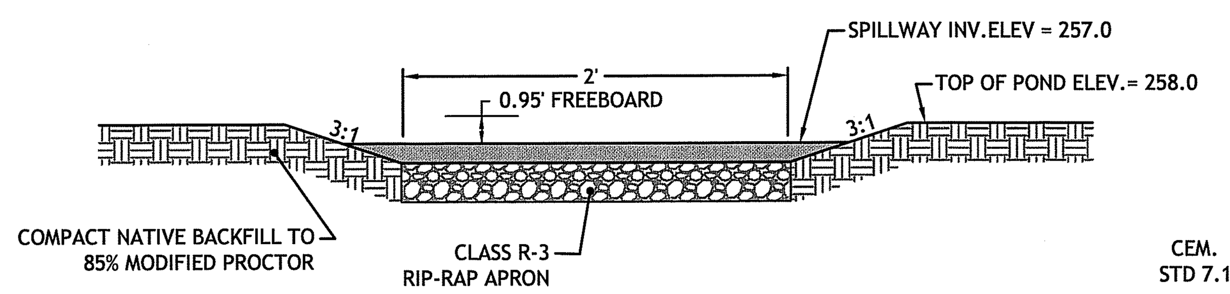

FRONT VIEW

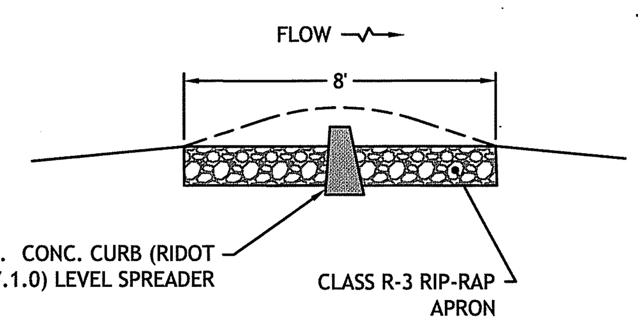

SIDE VIEW

NORTHWEST SEDIMENT FOREBAY WEIR SPILLWAY

NOT TO SCALE

Kindly be advised that this Permit is not equivalent to a verification of the type or extent of freshwater wetlands on site.

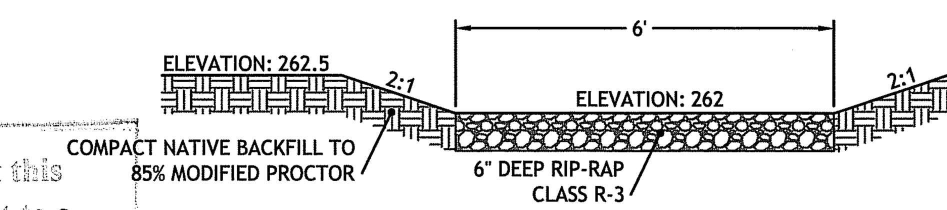

FRONT VIEW

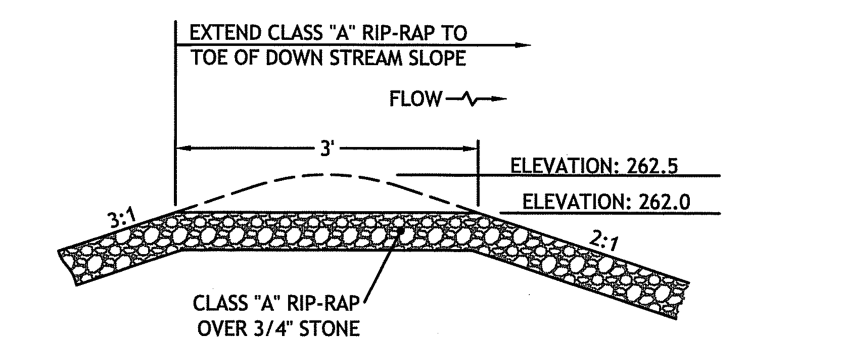

SIDE VIEW

NORTHEAST EMERGENCY SPILLWAY

NOT TO SCALE

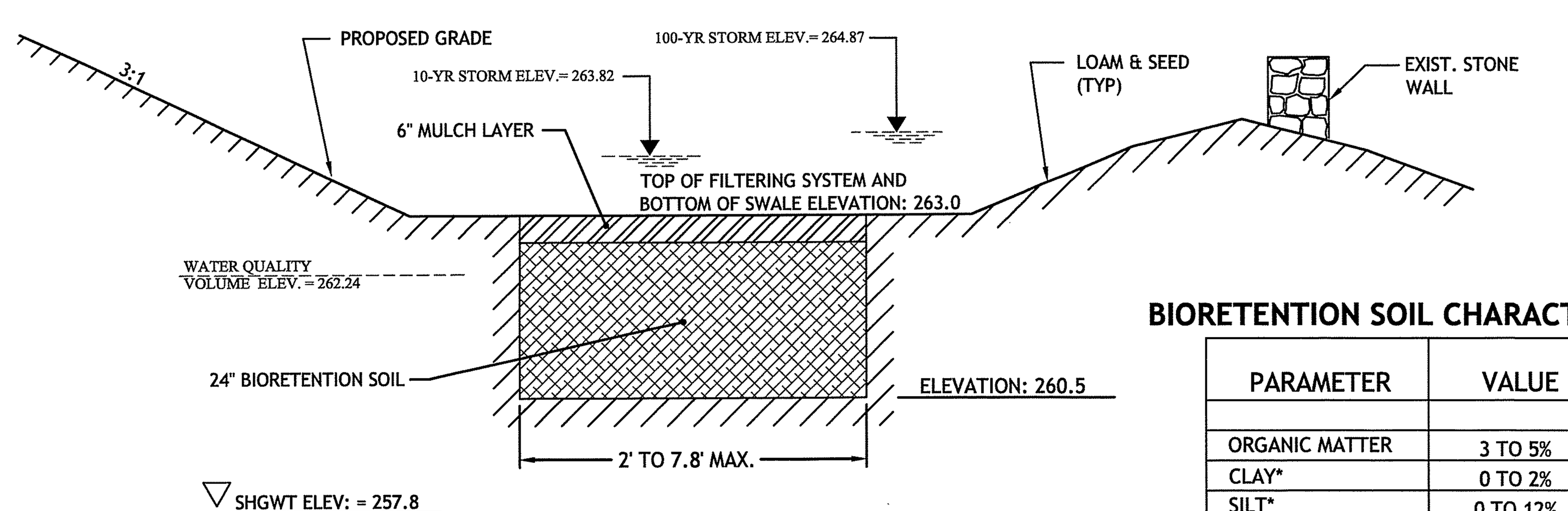

BIORETENTION SOIL CHARACTERISTICS

PARAMETER	VALUE
ORGANIC MATTER	3 TO 5%
CLAY*	0 TO 2%
SILT*	0 TO 12%
SAND*	85 TO 88%

* SOIL CHARACTERISTICS. AUGMENT SOILS WITH AGED LEAF COMPOST AND ACCEPTABLE TOPSOIL.

SOUTHWEST BIORETENTION FILTER DETAIL SECTION

NOT TO SCALE

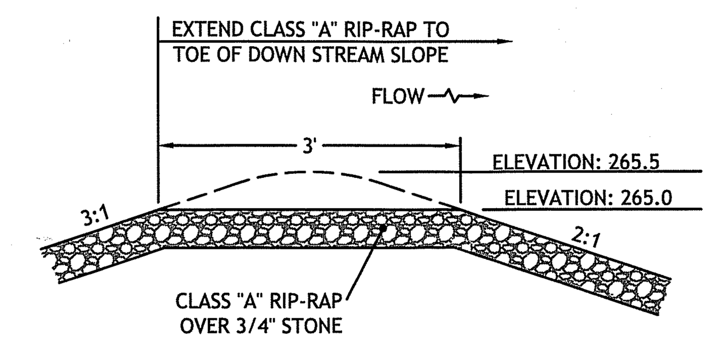

SIDE VIEW

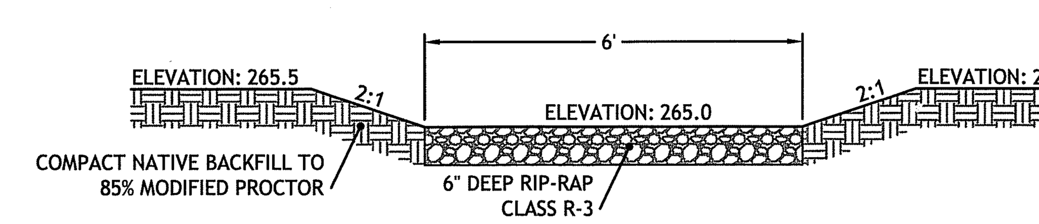

FRONT VIEW

SOUTHWEST EMERGENCY SPILLWAY

NOT TO SCALE

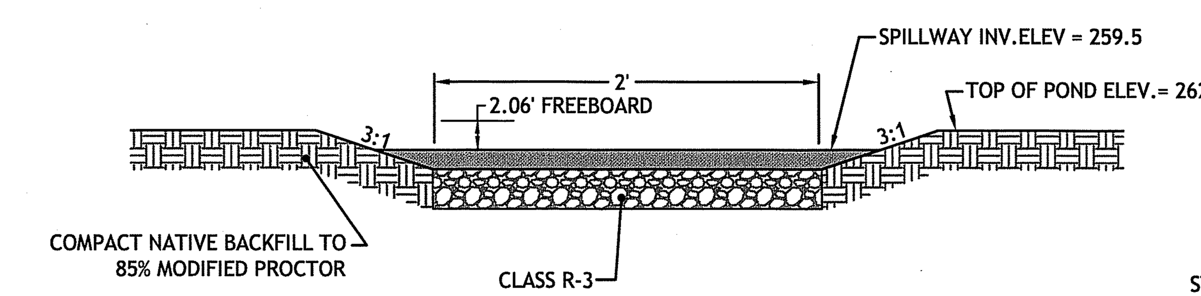

FRONT VIEW

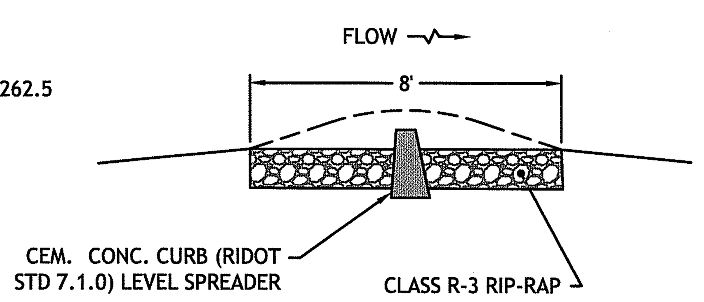

SIDE VIEW

NORTHEAST SEDIMENT FOREBAY WEIR SPILLWAY

NOT TO SCALE

DEPARTMENT OF ENVIRONMENTAL MANAGEMENT
OFFICE OF WATER RESOURCES
FRESHWATER WETLANDS PROGRAM
APPROVED WITH CONDITIONS
AS SPECIFIED IN THE LETTER OF APPROVAL
DATED MAR 1 1 2019 FILE # 17-0255
NO CHANGES ALLOWED WITHOUT PRIOR APPROVAL
APPROVED PLANS MUST BE AT CONSTRUCTION SITE

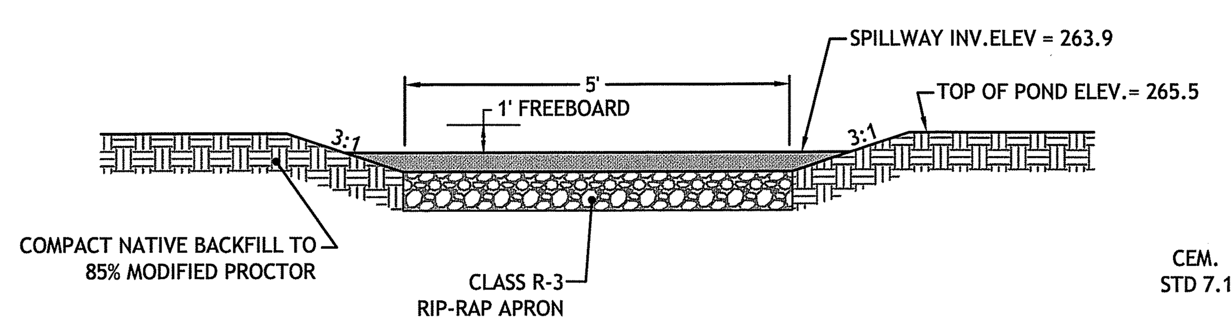

FRONT VIEW

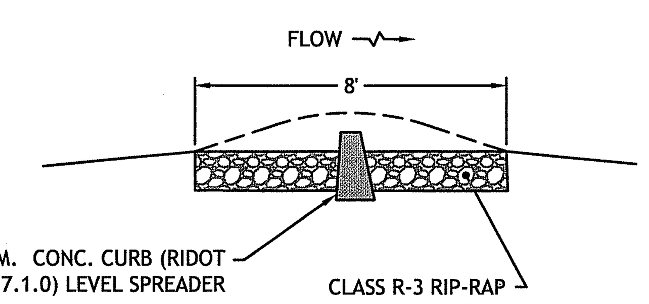

SIDE VIEW

SOUTHWEST SEDIMENT FOREBAY WEIR SPILLWAY

NOT TO SCALE

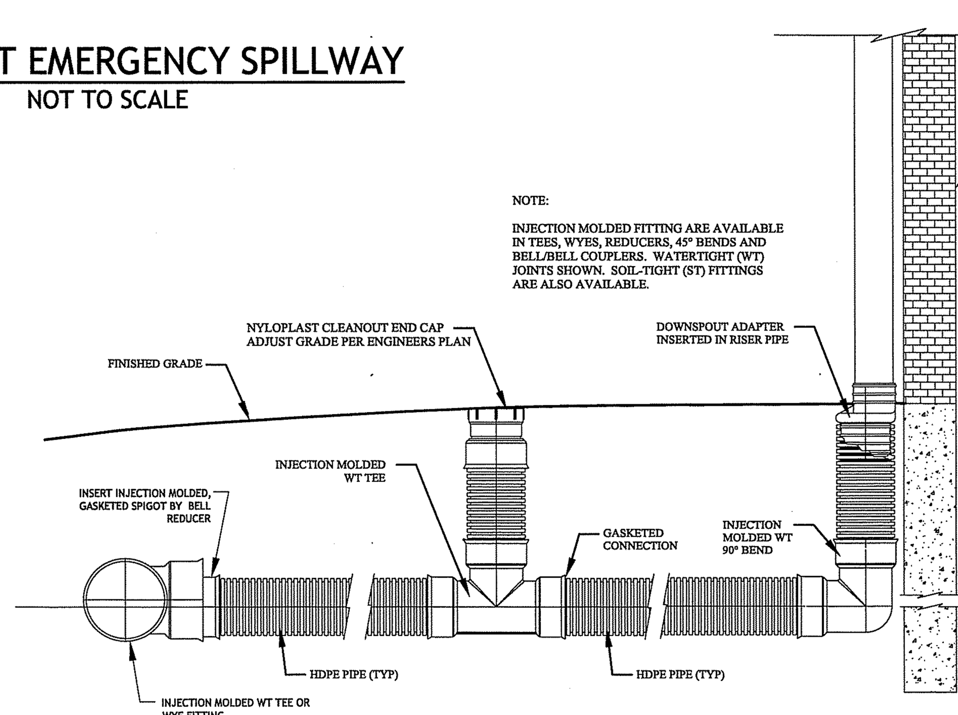

ROOFDRAIN W/CLEAN OUT DETAIL

N.T.S.

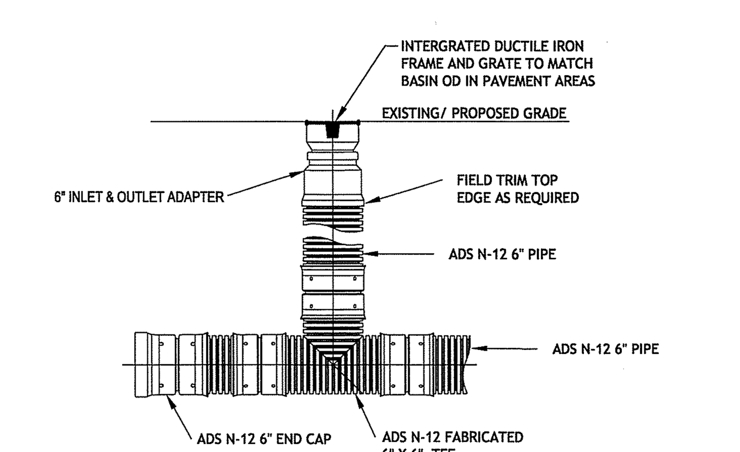

ADS CLEANOUT IN PAVEMENT AREAS

N.T.S.

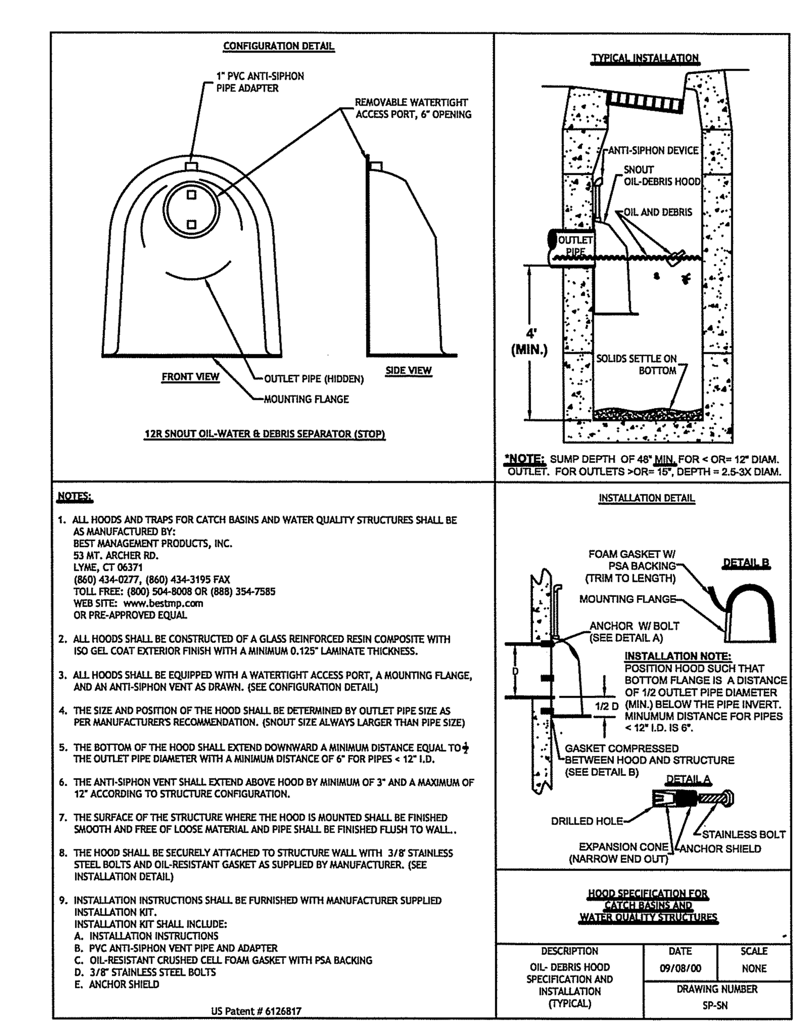

NOTES:

1. ALL HOODS AND TRAPS FOR CATCH BASINS AND WATER QUALITY STRUCTURES SHALL BE AS MANUFACTURED BY:
   BEST MANAGEMENT PRODUCTS, INC.
   53 MT. ARCHER RD.
   LYME, CT 06371
   (860) 434-0277, (860) 434-3195 FAX
   TOLL FREE: (800) 504-8008 OR (888) 354-7585
   WEB SITE: www.bestmp.com
   OR PRE-APPROVED EQUAL
2. ALL HOODS SHALL BE CONSTRUCTED OF A GLASS REINFORCED RESIN COMPOSITE WITH ISO GEL COAT EXTERIOR FINISH WITH A MINIMUM 0.125" LAMINATE THICKNESS.
3. ALL HOODS SHALL BE EQUIPPED WITH A WATERTIGHT ACCESS PORT, A MOUNTING FLANGE, AND AN ANTI-SIPHON VENT AS DRAWN. (SEE CONFIGURATION DETAIL)
4. THE SIZE AND POSITION OF THE HOOD SHALL BE DETERMINED BY OUTLET PIPE SIZE AS PER MANUFACTURER'S RECOMMENDATION. (SNOUT SIZE ALWAYS LARGER THAN PIPE SIZE)
5. THE BOTTOM OF THE HOOD SHALL EXTEND DOWNWARD A MINIMUM DISTANCE EQUAL TO ½ THE OUTLET PIPE DIAMETER WITH A MINIMUM DISTANCE OF 6" FOR PIPES < 12" I.D.
6. THE ANTI-SIPHON VENT SHALL EXTEND ABOVE HOOD BY MINIMUM OF 3" AND A MAXIMUM OF 12" ACCORDING TO STRUCTURE CONFIGURATION.
7. THE SURFACE OF THE STRUCTURE WHERE THE HOOD IS MOUNTED SHALL BE FINISHED SMOOTH AND FREE OF LOOSE MATERIAL AND PIPE SHALL BE FINISHED FLUSH TO WALL..
8. THE HOOD SHALL BE SECURELY ATTACHED TO STRUCTURE WALL WITH 3/8" STAINLESS STEEL BOLTS AND OIL-RESISTANT GASKET AS SUPPLIED BY MANUFACTURER. (SEE INSTALLATION DETAIL)
9. INSTALLATION INSTRUCTIONS SHALL BE FURNISHED WITH MANUFACTURER SUPPLIED INSTALLATION KIT.
   INSTALLATION KIT SHALL INCLUDE:
   A. INSTALLATION INSTRUCTIONS
   B. PVC ANTI-SIPHON VENT PIPE AND ADAPTER
   C. OIL-RESISTANT CRUSHED CELL FOAM GASKET WITH PSA BACKING
   D. 3/8" STAINLESS STEEL BOLTS
   E. ANCHOR SHIELD

US Patent # 6126817

HOOD SPECIFICATION FOR CATCH BASINS AND WATER QUALITY STRUCTURES

DESCRIPTION	DATE	SCALE
OIL- DEBRIS HOOD SPECIFICATION AND INSTALLATION (TYPICAL)	09/08/00	NONE
	DRAWING NUMBER	
	SP-SN	

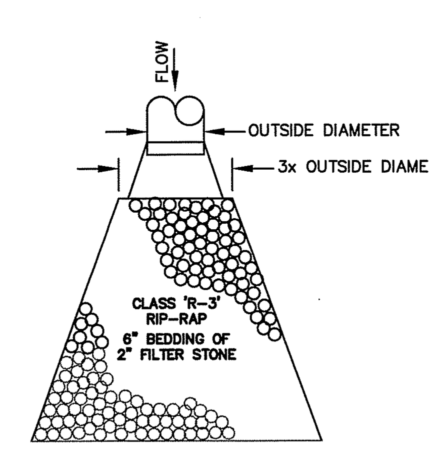

*INSTALL APRONS AS SHOWN ON PLAN

RIP-RAP	FILTER STONE NSA NO.	RIP-RAP	MIN.	AVG.	MAX.
R-2	FS-1	R-2	1"	1.5"	3"
R-3	FS-2	R-3	2"	3"	6"
R-4	FS-2	R-4	3"	6"	12"

Location	L	W	SIZE
SITE RIP RAP APRONS	6'	4'	R-3

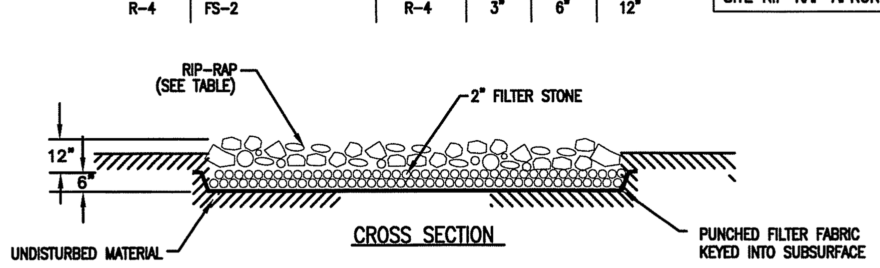

RIP-RAP APRON DETAIL

N.T.S.

REVISIONS:	
NO. DATE.	DESCRIPTION
1. 8-23-17	City Engineering Review Comments of 8-3-17
2. - 4. 12-17 to 5-19	RIDEM and RIDOT Review Comments of 11-20 -17, 11-30-17 and 5-8-18
5. 3-1-19	Roadway Profile Modification

DESIGNED BY:	DMD
CHECKED BY:	DMD
DATE:	7-1-17
PROJECT NO:	15-0001-11

SAPPHIRE ESTATES

MAJOR SUBDIVISION OF LAND PROJECT

MAP B6, LOTS 38-13 & 38-524
DIAMOND HILL ROAD AND WILCOX STREET
WOONSOCKET, RHODE ISLAND

DAVID M. D'AMICO
No. 6749
REGISTERED PROFESSIONAL ENGINEER
CIVIL
3/1/19

D'AMICO ENGINEERING TECHNOLOGY, INC.
Civil · Transportation · Land Use
2080 Mineral Spring Ave., North Providence, RI 02911
(401) 622-1470 (401) 353-1190 fax www.dengineeringtec.com

MODIFIED CONSTRUCTION PLANS

SITE DETAILS NO. 2

SHEET 14 OF 15

MAR 4 2019

N:\D'Amico Engineering Technology, Inc\15-0001 Marc N Nyberg\11 Diamond Hill Rd Subdivision\Sapphire Estates Subdivision Construction Plans MOD 3-1-19.dwg Mar. 02, 2019 3:51pm

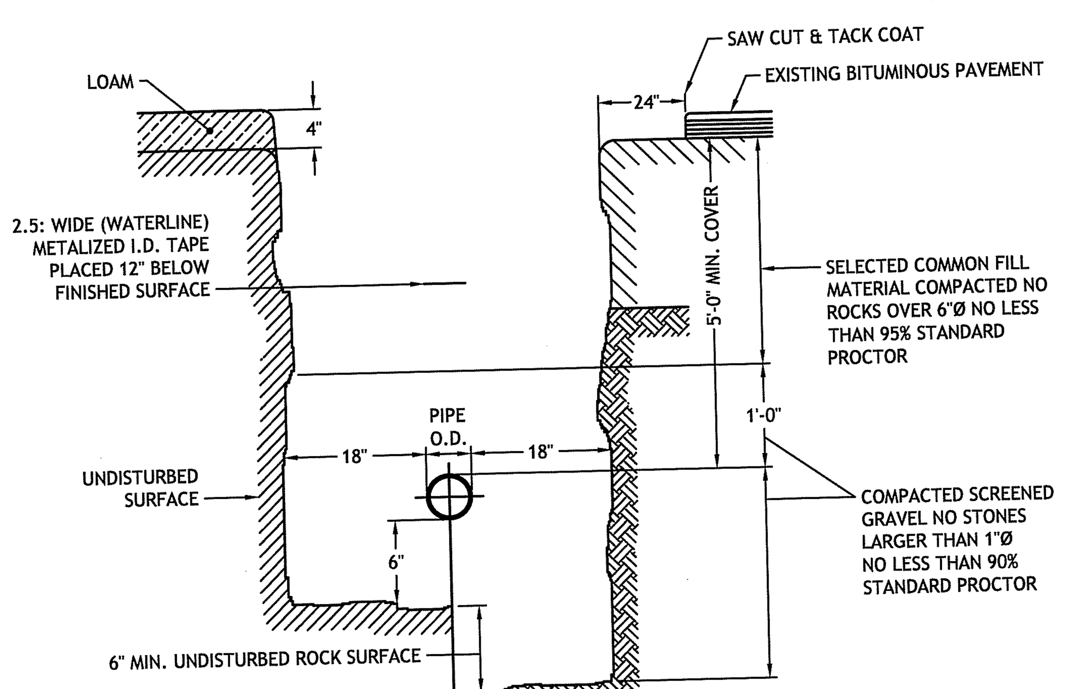

NOTES:
1. ROADWAY RESTORATION IN ACCORDANCE WITH COMMUNITY OR RIDOT.
2. SEE CITY OF WOONSOCKET STANDARD DETAILS FOR FURTHER REFERENCE.

WATER TRENCH INSTALLATION IN ROCK AND SOIL
NOT TO SCALE

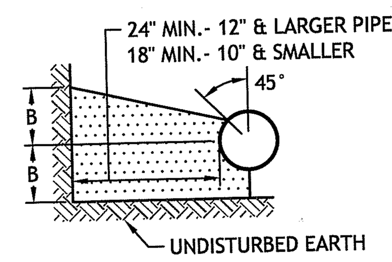

BENDS & TEES SECTION

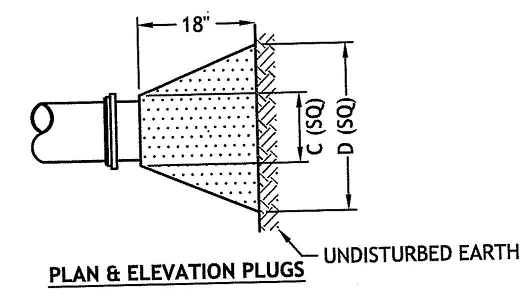

PLAN & ELEVATION PLUGS

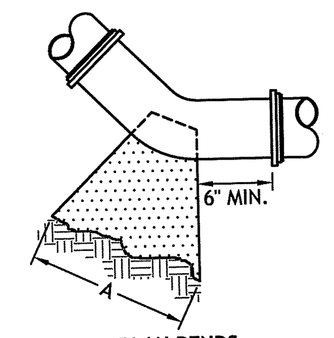

PLAN BENDS

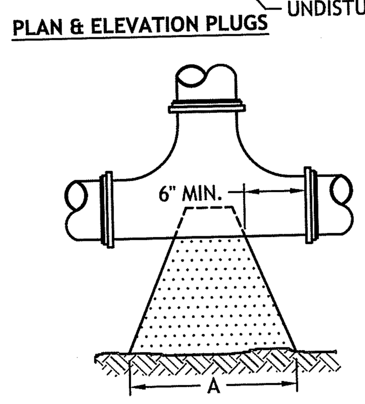

PLAN BENDS

NOTE
1. ALL CONCRETE SHALL BE 400 P.S.I. @ 28 DAYS.
2. CONCRETE THRUST BLOCKS SHALL BEAR AGAINST UNDISTURBED EARTH.
3. FORMS TO BE USED AS NECESSARY.
4. ALL BOLTS AND NUTS TO BE PROTECTED FROM CONCRETE AND EASILY ACCESSIBLE WHEN THRUST BLOCK INSTALLED.
5. REGISTERED PROFESSIONAL ENGINEER IN THE STATE OF R.I. SHALL VERIFY ALL CALCULATIONS DURING DESIGN TO MEET CONDITIONS OF PROJECT AND CITY REQUIREMENTS.

SIZE	TEES		PLUGS		90° BEND		45° BEND		22 1/2" BEND		11 1/4" BEND	
	A	B	C	D	A	B	A	B	A	B	A	B
4"	22"	12"	22"	12"	24"	16"	20"	10"	14"	7"	11"	5"
6"	30"	18"	30"	18"	35"	22"	27"	15"	19"	12"	13"	8"
8"	38"	24"	38"	24"	46"	29"	33"	22"	25"	14"	19"	10"

THRUST BLOCK
NOT TO SCALE

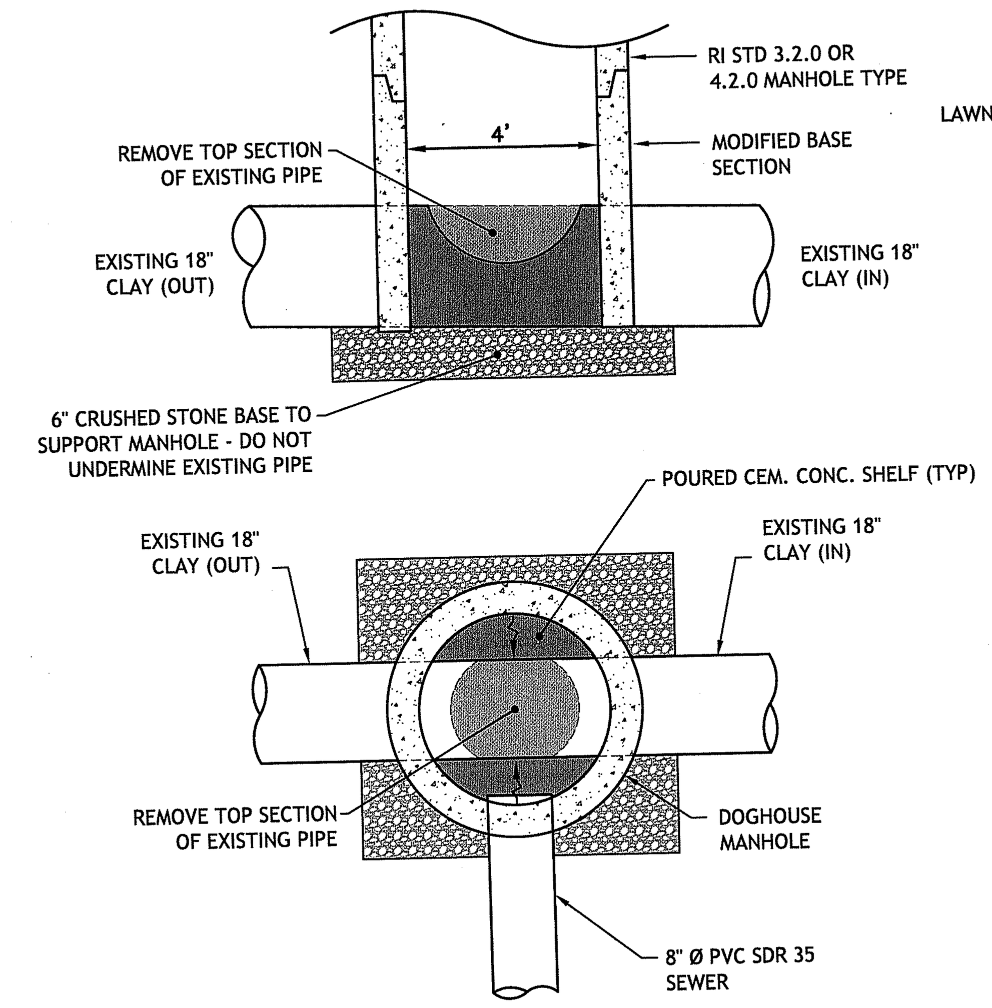

DOG HOUSE MANHOLE (DIAMOND HILL RD)
BASE SECTION DETAIL
NOT TO SCALE

Kindly be advised that this Permit is not equivalent to a verification of the type or extent of freshwater wetlands on site.

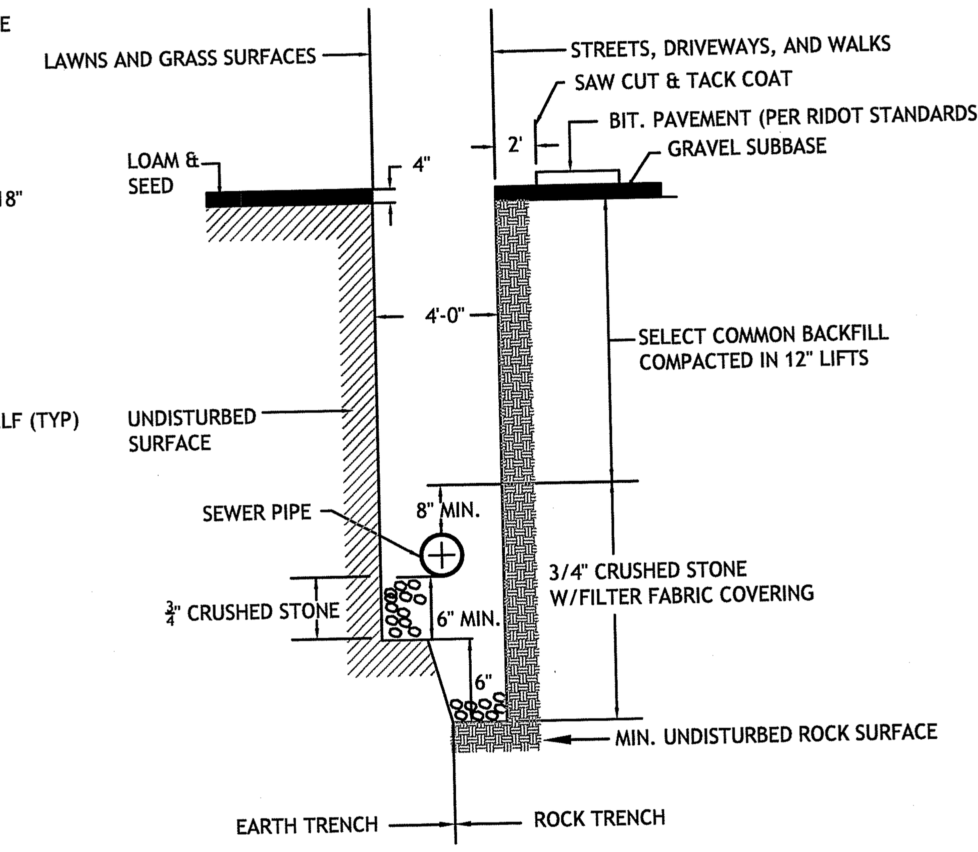

TYPICAL SEWER LINE TRENCH DETAIL
NO SCALE

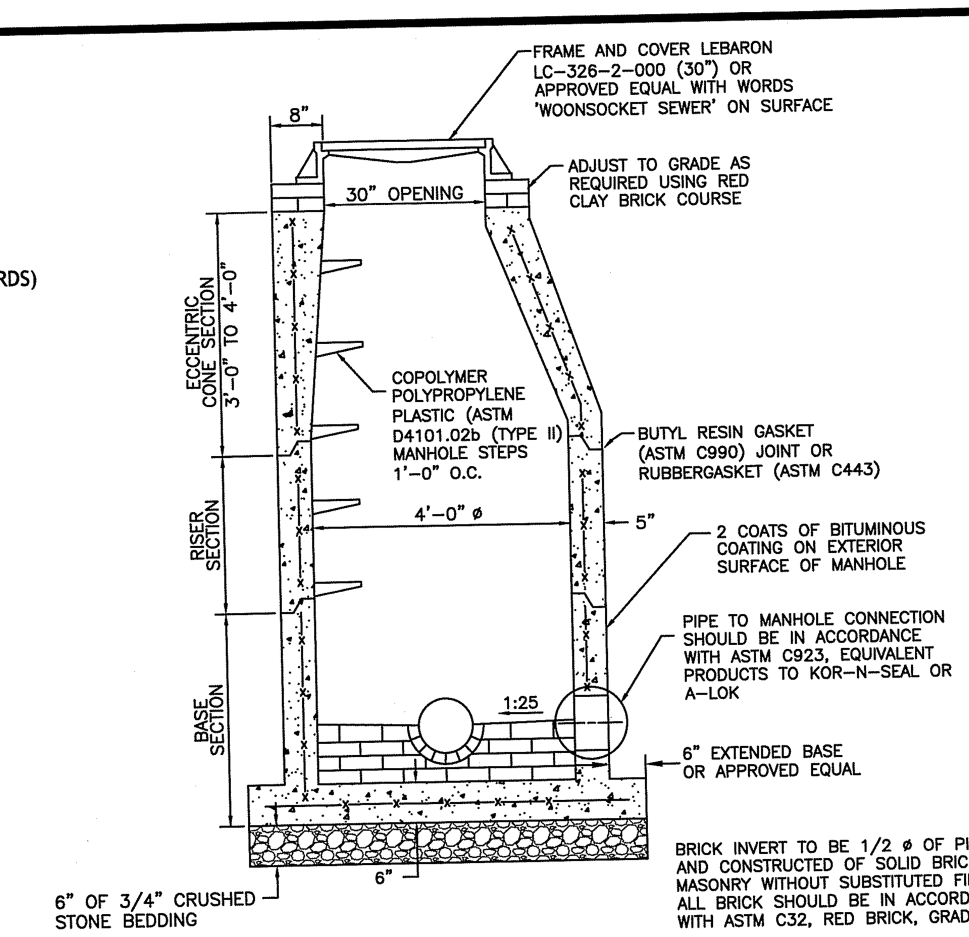

NOTES:
1. MANHOLE SHALL BE MANUFACTURED IN ACCORDANCE WITH ASTM-C478
2. INVERT AND TABLE SHALL CONSIST ENTIRELY OF BRICK AND MORTAR.
3. ANY NECESSARY ADJUSTMENTS DURING CONSTRUCTION WILL BE DONE BY SAW-CUTTING
4. ALL STEPS SHOULD BE FACTORY INSTALLED BY THE MANHOLE MANUFACTURER 12-INCHES ON CENTER WITH PROPER VERTICAL ALIGNMENT.

TYPICAL SANITARY MANHOLE DETAIL
NOT TO SCALE

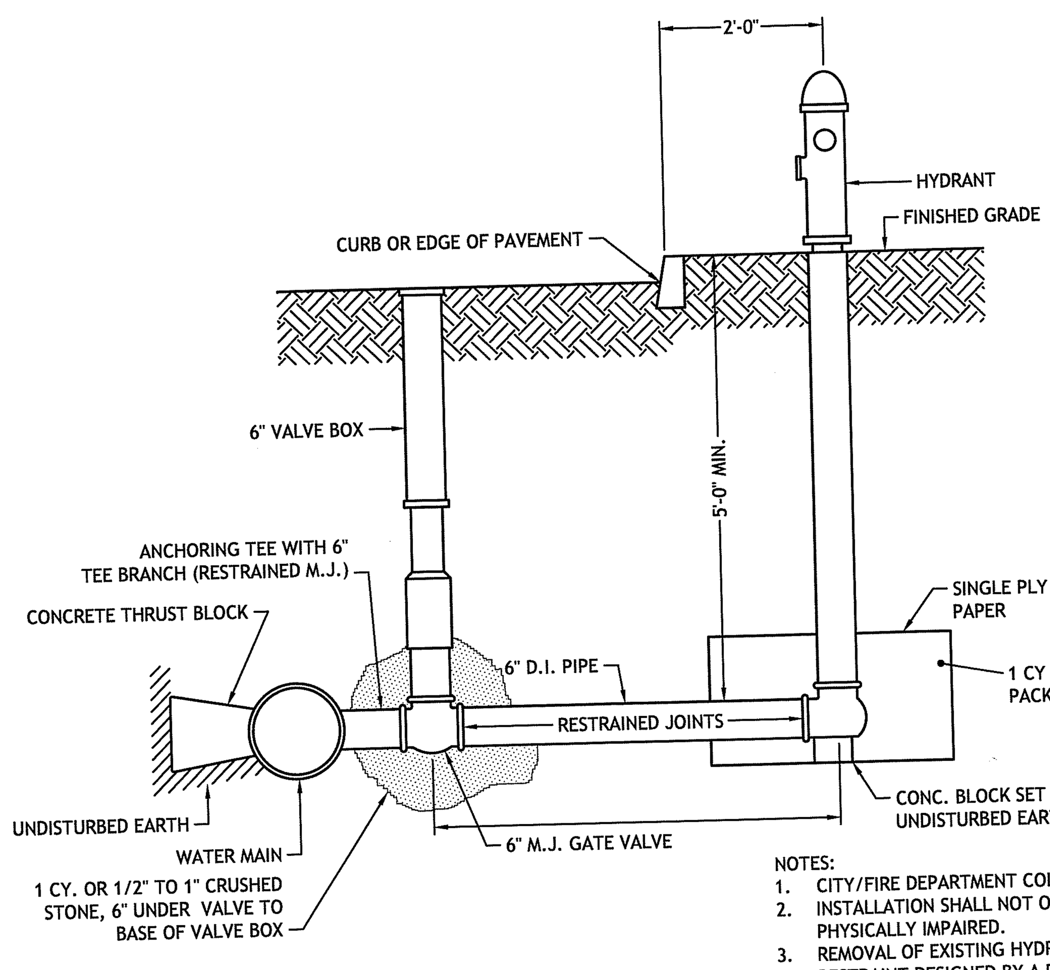

NOTES:
1. CITY/FIRE DEPARTMENT COLOR SCHEME FOR HYDRANT
2. INSTALLATION SHALL NOT OBSTRUCT SIDEWALK TO PEDESTRIAN OR PHYSICALLY IMPAIRED.
3. REMOVAL OF EXISTING HYDRANT MAY REQUIRE ADDITIONAL RESTRAINT DESIGNED BY A PROFESSIONAL ENGINEER.
4. MECHANICAL JOINT PIPE W/ RESTRAINED JOINTS FOR BRANCHES OVER ONE LENGTH OF PIPE.

HYDRANT
NOT TO SCALE

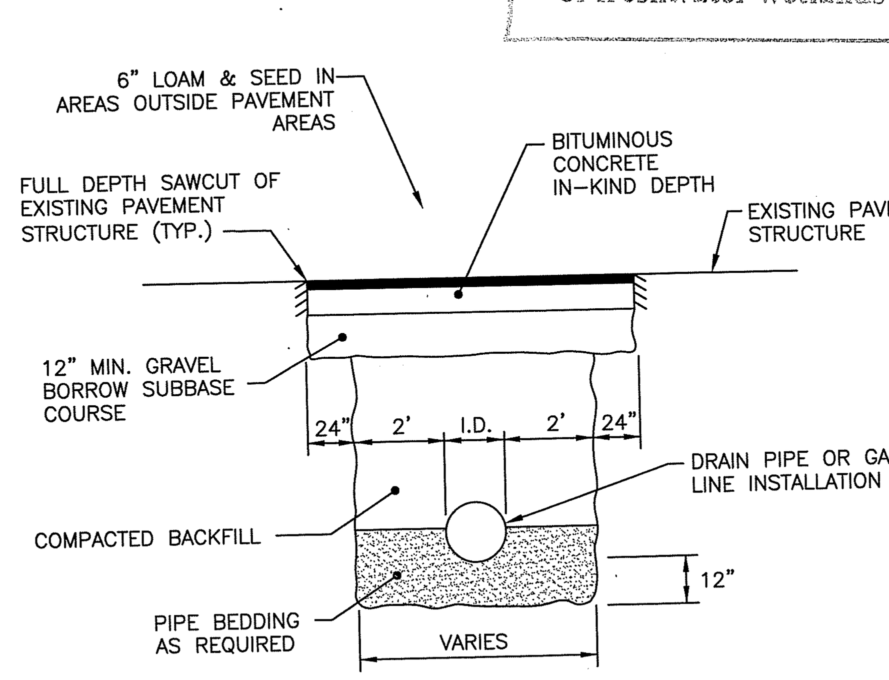

TYPICAL DRAIN TRENCH AND PAVEMENT PATCH DETAIL
NOT TO SCALE

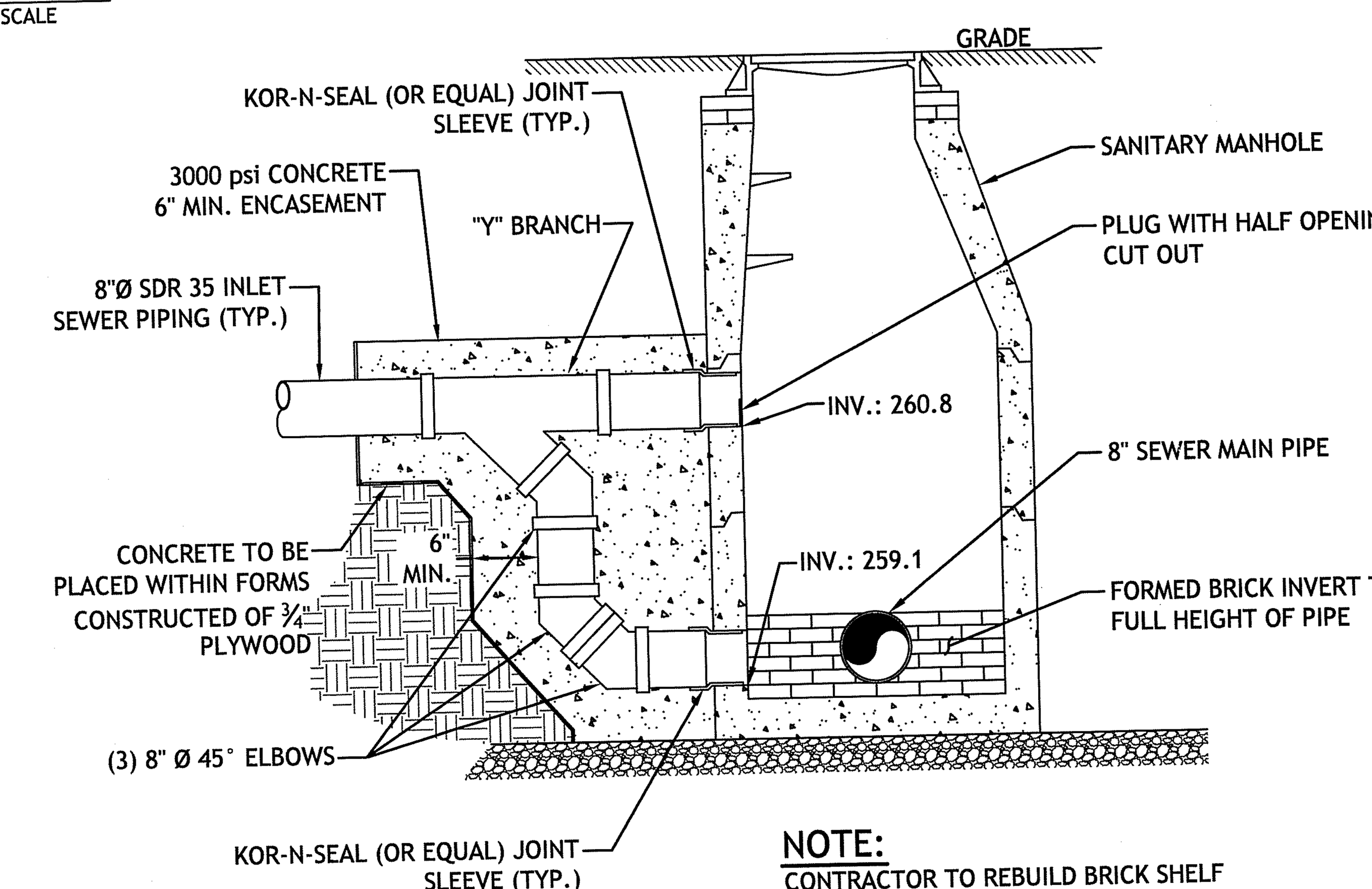

NOTE:
CONTRACTOR TO REBUILD BRICK SHELF TO INCLUDE NEW 8" PIPE, IF REQUIRED

SANITARY MANHOLE WITH EXTERNAL DROP
NOT TO SCALE

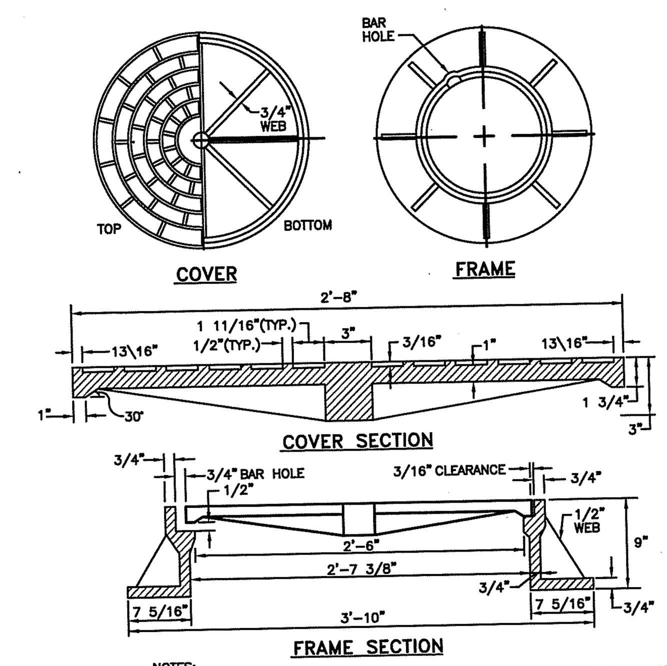

NOTES:
1. FRAME AND GRATE SHALL CONFORM TO SECTION M.04 OF THE R.I. STANDARD SPECIFICATIONS.
2. FRAME AND COVER SEATS MUST HAVE MACHINE FINISH.

30" HEAVY-DUTY ROUND FRAME AND COVER MODIFIED WITH WORDS 'WOONSOCKET SEWER' ON COVER SURFACE (R.I. STANDARD 6.2.1) MOD.

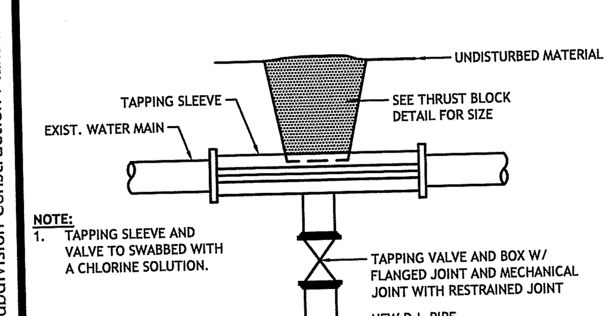

NOTE:
1. TAPPING SLEEVE AND VALVE TO SWABBED WITH A CHLORINE SOLUTION.

TAPPING SLEEVE AND VALVE
NOT TO SCALE

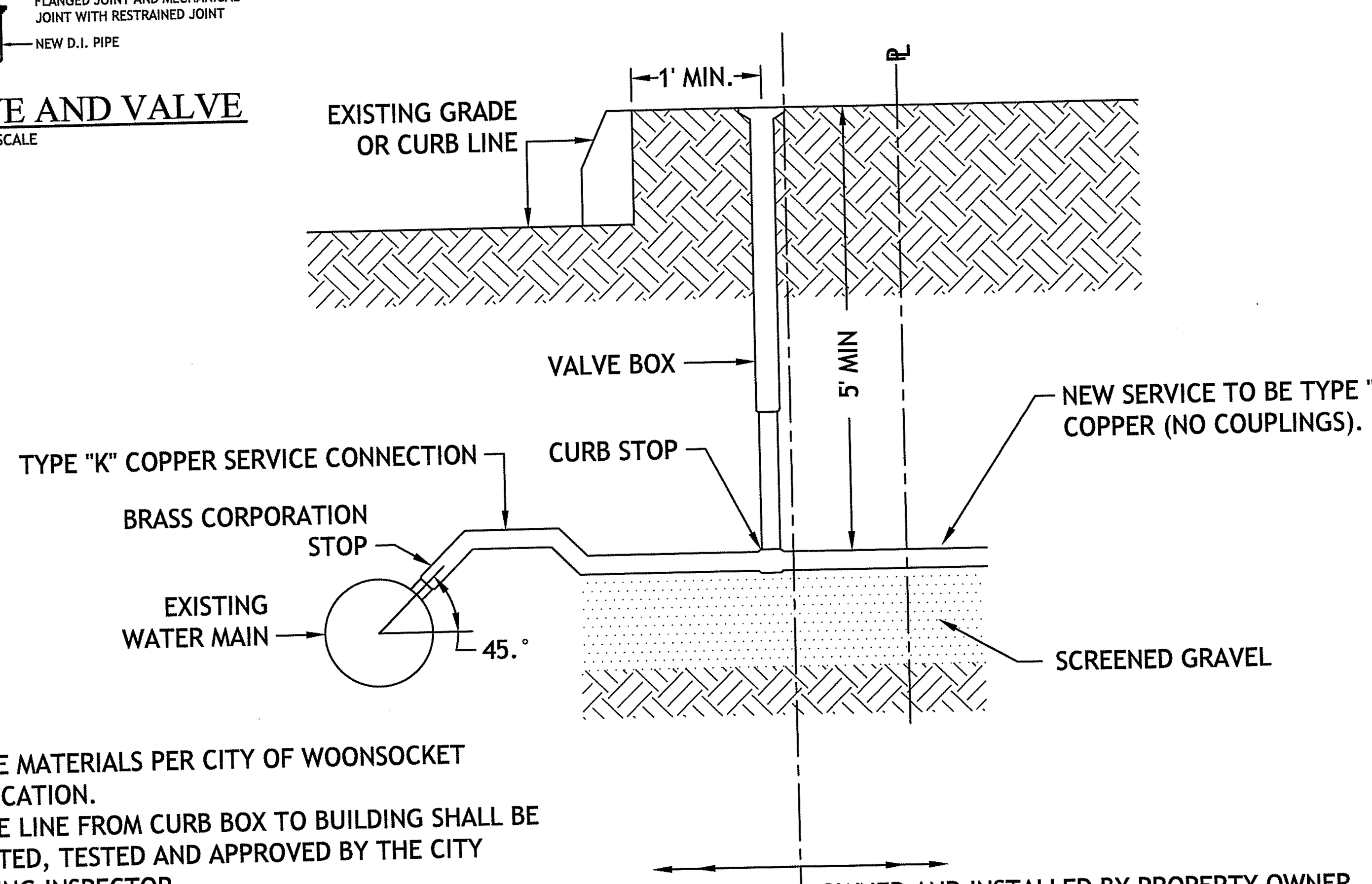

NOTE:
1. SERVICE MATERIALS PER CITY OF WOONSOCKET SPECIFICATION.
2. SERVICE LINE FROM CURB BOX TO BUILDING SHALL BE INSPECTED, TESTED AND APPROVED BY THE CITY PLUMBING INSPECTOR.

DOMESTIC WATER SERVICE CONNECTION
NOT TO SCALE

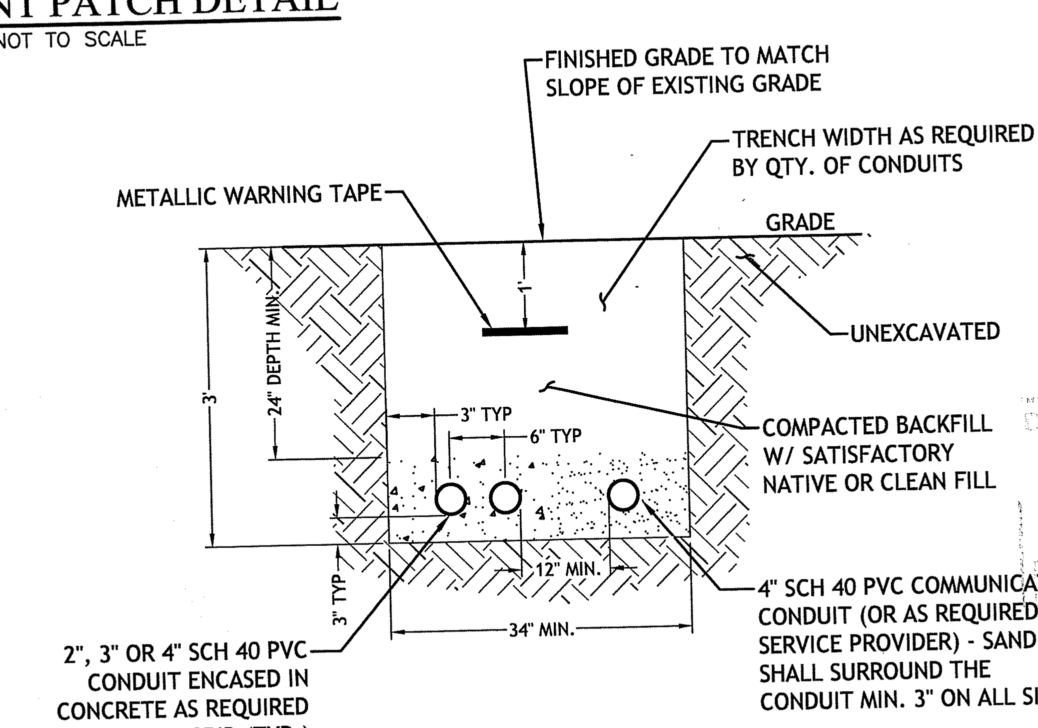

ELEC. & COMM. CONDUIT LINE TRENCH
N.T.S.

DEPARTMENT OF ENVIRONMENTAL MANAGEMENT
OFFICE OF WATER RESOURCES
FRESHWATER WETLANDS PROGRAM
APPROVED WITH CONDITIONS
AS SPECIFIED IN THE LETTER OF APPROVAL
DATED MAR 1 1 2019 FILE # 17-0255
NO CHANGES ALLOWED WITHOUT PRIOR APPROVAL
APPROVED PLANS MUST BE AT CONSTRUCTION SITE
Martin D. Wencek

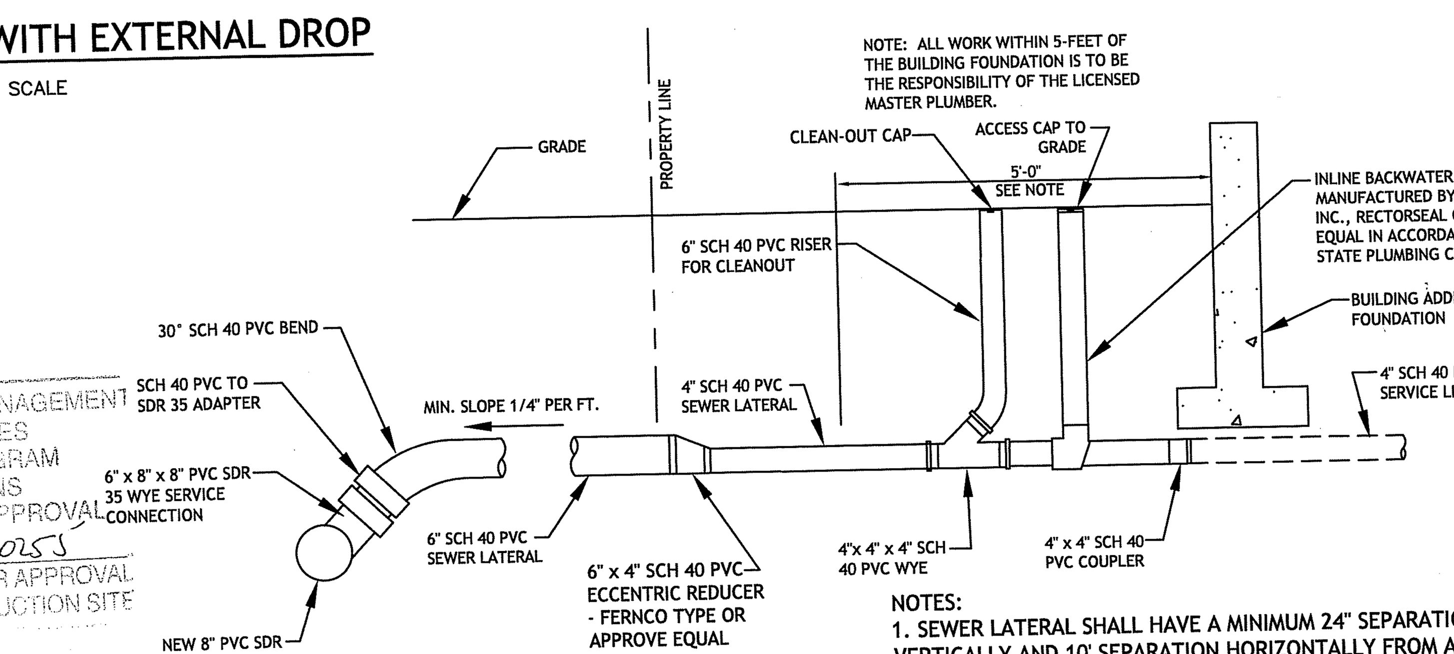

NOTES:
1. SEWER LATERAL SHALL HAVE A MINIMUM 24" SEPARATION VERTICALLY AND 10' SEPARATION HORIZONTALLY FROM ALL WATER SUPPLY LINES.

2. SEE CITY OF WOONSOCKET STANDARD DETAILS FOR ADDITIONAL SEWER SERVICE DETAILS.

SEWER SERVICE LATERAL AT BUILDING DETAIL
NOT TO SCALE

MAR 4 2019

REVISIONS:		
NO.	DATE.	DESCRIPTION
1.	8-23-17	City Engineering Review Comments of 8-3-17
2. - 4.	12-17 to 5-19	RIDEM and RIDOT Review Comments of 11-20-17, 11-30-17 and 5-8-18
5.	3-1-19	Roadway Profile Modification

DESIGNED BY:	DMD
CHECKED BY:	DMD
DATE:	7-1-17
PROJECT NO:	15-0001-11

SAPPHIRE ESTATES
MAJOR SUBDIVISION OF LAND PROJECT
MAP B6, LOTS 38-13 & 38-524
DIAMOND HILL ROAD AND WILCOX STREET
WOONSOCKET, RHODE ISLAND

DAVID M. D'AMICO
No. 6749
REGISTERED PROFESSIONAL ENGINEER
CIVIL
3/1/19

D'AMICO ENGINEERING TECHNOLOGY, INC.
Civil · Transportation · Land Use
2080 Mineral Spring Ave., North Providence, RI 02911
(401) 622-1470 (401) 353-1190 fax www.dengineeringtec.com

MODIFIED CONSTRUCTION PLANS

SITE DETAILS NO. 3

SHEET 15 OF 15

N:\D'Amico Engineering Technology, Inc\15-0001 Marc N Nyberg\11 Diamond Hill Rd Subdivision\Sapphire Estates Subdivision Construction Plans MOD 3-1-19.dwg Mar. 02, 2019 3:52pm

LOCUS MAP (NOT TO SCALE) ↑ N

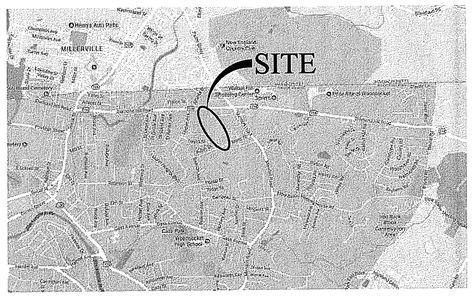

STATE WIDE MAP

PRELIMINARY PLAN FOR PROPOSED

SAPPHIRE ESTATES

Kindly be advised that this Permit is not equivalent to a verification of the type or extent of freshwater wetlands on site.

MAJOR SUBDIVISION OF LAND

MAP B6, LOTS 38-13 & 38-524
DIAMOND HILL ROAD AND WILCOX STREET
WOONSOCKET, RHODE ISLAND

DEPARTMENT OF ENVIRONMENTAL MANAGEMENT
OFFICE OF WATER RESOURCES
FRESHWATER WETLANDS PROGRAM
APPROVED WITH CONDITIONS
AS SPECIFIED IN THE LETTER OF APPROVAL
DATED JUL 13 2018 FILE # A-0255
NO CHANGES ALLOWED WITHOUT PRIOR APPROVAL
APPROVED PLANS MUST BE AT CONSTRUCTION SITE
Jennifer D. Wenck

ZONING DISTRICT - R3

PROJECT TEAM

OWNER: JOHN LAQUERRE
276 SAINT LOUIS AVE.
WOONSOCKET, RI 02895

CIVIL: D'AMICO ENGINEERING TECHNOLOGY, INC
2080 MINERAL SPRING AVE.
NORTH PROVIDENCE, RI 02911
PHONE: 401-622-1470
FAX: 401-709-0201

SURVEYOR: MARC N. NYBERG ASSOCIATES, INC
501 GREAT ROAD, UNIT 104
NORTH SMITHFIELD, RI 02896
PHONE: 401-762-2870
FAX: 401-762-2871

INDEX OF DRAWINGS

SHEET NO.	PLAN
1	COVER SHEET
2	GENERAL NOTES AND LEGEND
3	EXISTING CONDITIONS
4	RECORD SUBDIVISION PLAN #1
5	RECORD SUBDIVISION PLAN #2
6	SITE PLAN
7	GRADING AND DRAINAGE PLAN
8	PLAN AND PROFILE PLAN NO. 1
9	PLAN AND PROFILE PLAN NO. 2
10	SOIL EROSION AND SEDIMENT CONTROL PLAN
11	SOIL EROSION CONTROL DETAILS
12	SITE DETAILS NO. 1
13	SITE DETAILS NO. 2
14	SITE DETAILS NO. 3

Environmental Management
MAR 15 2018
Received

WOONSOCKET PLANNING BOARD
MASTER PLAN APPROVAL: MARCH 22, 2017
PRELIMINARY PLAN APPROVAL: AUGUST 1, 2017

REVISIONS:

NO.	DATE.	DESCRIPTION
1.	8-23-17	City Engineering Review Comments of 8-3-17
2.	12-1-17	RIDOT Review Comments of 11-20-17
3.	12-12-17	RIDEM Review Comments of 11-30-17

DESIGNED BY: DMD
DRAWN BY:
CHECKED BY: DMD
DATE: 7-1-17
PROJECT NO: 15-0001-11

SAPPHIRE ESTATES
MAJOR SUBDIVISION OF LAND PROJECT
MAP B6, LOTS 38-13 & 38-524
DIAMOND HILL ROAD AND WILCOX STREET
WOONSOCKET, RHODE ISLAND

DAVID M. D'AMICO
No. 6749
REGISTERED PROFESSIONAL ENGINEER
CIVIL
12/12/17

DEtec.
D'AMICO ENGINEERING TECHNOLOGY, INC.
Civil · Transportation · Land Use
2080 Mineral Spring Ave., North Providence, RI 02911
(401) 622-1470 (401) 353-1190 fax www.dengineeringtec.com

PERMIT PLANS, NOT FOR CONSTRUCTION

COVER PLAN

SHEET 1 OF 14

N:\D'Amico Engineering Technology, Inc\15-0001 Marc N Nyberg\11 Diamond Hill Rd Subdivision\Sapphire Estates Subdivision Permit Plan Set 12-1-17 Rev 1.dwg Dec. 12, 2017 3:14pm

GENERAL NOTES:

1. THE LOCATION AND DEPTH OF EXISTING UTILITIES ARE APPROXIMATE AND HAVE BEEN PLOTTED FROM THE LATEST AVAILABLE INFORMATION. THE UTILITY LOCATIONS ARE APPROXIMATE AND MAY NOT BE ALL INCLUSIVE. THE CONTRACTOR SHALL CHECK AND VERIFY THE LOCATIONS OF ALL EXISTING UTILITIES, BOTH OVERHEAD AND UNDERGROUND, AND "DIG-SAFE" MUST BE NOTIFIED PRIOR TO COMMENCING ANY CONSTRUCTION OPERATIONS. RESTORATION AND REPAIR OF DAMAGE TO EXISTING UTILITIES SHALL BE THE RESPONSIBILITY OF THE CONTRACTOR WITH NO ADDITIONAL COST THE OWNER. NO EXCAVATION SHALL COMMENCE UNTIL ALL INVOLVED UTILITY COMPANIES AND/OR CITY WHOSE FACILITIES MIGHT BE AFFECTED BY ANY WORK TO BE PERFORMED BY THE CONTRACTOR ARE NOTIFIED AT LEAST 72 HOURS IN ADVANCE.

SITE NOTES:

1. CONTRACTOR SHALL BE RESPONSIBLE FOR REMOVING AND LEGALLY DISPOSING (R&D) OF ALL MATERIALS INDICATED ON THE PLANS.
2. STOCKPILES OF EARTH MATERIALS SHALL NOT BE LOCATED ADJACENT TO DRAINAGE STRUCTURES.
3. ALL DISTURBED AREAS OUTSIDE OF THE PAVED AREAS WILL RECEIVE A MINIMUM OF 6" OF LOAM AND SEED.
4. THE CONTRACTOR SHALL PROVIDE AND MAINTAIN SURVEY LAYOUT SERVICES FOR THE WORK AND SHALL SUBMIT "AS-BUILT" DRAWINGS OF ALL WORK, WHICH SHALL BE STAMPED AND CERTIFIED BY A RHODE ISLAND REGISTERED PROFESSIONAL LAND SURVEYOR.
5. ANY ITEM OF WORK NOT SPECIFICALLY INDICATED ON THE PLANS BUT IS REQUIRED FOR THE COMPLETE CONSTRUCTION OF THE PROJECT WILL BE CONSIDERED INCIDENTAL TO THE CONTRACT AND INCLUDED IN THE CONTRACT BID PRICE. IT WILL BE THE CONTRACTOR'S RESPONSIBILITY TO VERIFY ALL EXISTING SITE CONDITIONS.
6. REFER TO ARCHITECTURAL AND STRUCTURAL PLANS FOR ACTUAL SIZE OF THE PROPOSED BUILDING.
7. WHERE NECESSARY TO REMOVE CURBS, CATCH BASINS OR DRAINS TO COMPLETE WORK, THE CONTRACTOR SHALL REPLACE SUCH ITEMS TO THE SATISFACTION OF THE ENGINEER AT NO ADDITIONAL COST TO THE OWNER.
8. ANY EXISTING PIPE OR UTILITY DAMAGED BY THE CONTRACTOR'S OPERATIONS SHALL BE REPAIRED IMMEDIATELY BY THE CONTRACTOR AT NO COST TO THE OWNER OR ENGINEER.
9. THE CONTRACTOR SHALL RESTORE TO ITS ORIGINAL CONDITION OR REPLACE TREES, SHRUBS, FENCES, SIGNS, GUARDRAILS, DRIVEWAYS, SIDEWALKS AND ANY OTHER OBJECT AFFECTED BY THIS OPERATION.
10. THE TOPS OF ALL VALVE BOXES AND CURB BOXES SHALL BE FLUSH WITH GROUND OR PAVEMENT SURFACE LEVEL AND PLUMB, UNLESS OTHERWISE DIRECTED.
11. ROADWAYS SHALL BE LEFT PASSABLE AT ALL TIMES. CLOSURE OF ROADWAY IS NOT PERMITTED.
12. THE CONTRACTOR SHALL PROVIDE ACCESS TO ALL DRIVEWAYS AT COMPLETION OF EACH DAYS WORK.
13. WATER SERVICE SHALL BE MAINTAINED AT ALL TIMES.
14. ALL LEDGE TO BE REMOVED BY MECHANICAL MEANS.
15. ALL CONSTRUCTION WORK SHALL BE PERFORMED IN THE DRY. THE CONTRACTOR SHALL PROVIDE, OPERATE AND MAINTAIN ALL PUMPS, DRAINS, WET POINTS, SCREENS, OR OTHER FACILITIES NECESSARY TO CONTROL, COLLECT AND DISPOSE OF ALL SURFACE AND SUBSURFACE WATER ENCOUNTERED IN THE PERFORMANCE OF THE WORK.
16. REFER TO PLUMBING PLANS FOR CONTINUATION OF ALL UTILITIES WITHIN 5' (FIVE) FEET OF THE BUILDING.
17. ALL SITE WORK, INCLUDING BUT NOT LIMITED TO, BITUMINOUS PAVEMENT, ROADWAY CONSTRUCTION, AGGREGATE MATERIALS, DRAINAGE STRUCTURES, CURBING, SIDEWALK, LANDSCAPING, SAW CUTTING, ETC. SHALL CONFORM TO THE RHODE ISLAND DEPARTMENT OF TRANSPORTATION STANDARD SPECIFICATIONS FOR ROADWAY AND BRIDGE CONSTRUCTION, 2010 EDITION (WITH LATEST ADDENDA) AND THE RIDOT STANDARD DETAILS, 1998 EDITION (WITH LATEST ADDENDA).

MISCELLANEOUS UTILITY NOTES:

1. PRIOR TO CONSTRUCTION ALL POTENTIAL UTILITY/DRAINAGE CONFLICTS MUST BE IDENTIFIED BY THE CONTRACTOR. ANY MODIFICATIONS TO THE PROPOSED UTILITIES TO AVOID CONFLICTS MUST BE APPROVED BY THE ENGINEER PRIOR TO CONSTRUCTION. NO EXTRA PAYMENT TO THE CONTRACTOR DUE TO RELOCATION'S WILL BE AUTHORIZED.
2. THE UTILITY PLAN DOES NOT DEPICT THE NECESSARY ELECTRICAL CONDUIT/WIRING TO SERVICE THE PROPOSED LIGHTING AND SIGNS, WHICH WILL BE PERFORMED BY THE CONTRACTOR FOR NO ADDITIONAL COST.
3. OVERHEAD ELECTRIC AND TELEPHONE SERVICES ARE TO BE REMOVED BY THE APPROPRIATE UTILITY COMPANY AND COORDINATED BY THE CONTRACTOR.
4. THE CONTRACTOR SHALL AT ALL TIMES PROVIDE A SUFFICIENT NUMBER OF WORKMEN AND GUARDS AS MAY BE NECESSARY TO PROPERLY SAFEGUARD THE PUBLIC FROM THERE OPERATIONS.
5. THE CONTRACTOR SHALL TAKE PRECAUTIONS AGAINST DAMAGING OF PAVING, SIDEWALKS, UTILITIES, OR PRIVATE PROPERTIES AND SHALL PROMPTLY REPAIR AT HIS OWN EXPENSE ANY DAMAGE TO SUCH PAVING, SIDEWALKS, UTILITIES, OR PRIVATE PROPERTIES TO THE SATISFACTION OF THE OWNER OR CITY.
6. EXISTING UTILITY FRAMES AND COVERS FOR SANITARY SEWER, WATER, GAS, STORM DRAINAGE AND OTHER UTILITIES SHALL BE ADJUSTED TO GRADE AS REQUIRED IN NEW PAVING AND PAVEMENT OVERLAY AREAS.

DRAINAGE SYSTEM NOTES:

1. ALL RIM ELEVATIONS SHOWN ARE APPROXIMATE AND ARE TO BE SET FLUSH WITH FINAL GRADES
2. THE DESIGN ENGINEER MUST SUBMIT AN AS BUILT PLAN AND A CERTIFICATION TO THE CITY ENGINEER THAT THE CONSTRUCTION IS IN COMPLIANCE WITH THE DESIGN PLANS FOR ALL ELEMENTS OF THE STORM OR DRAINAGE SYSTEM PRIOR TO THE ISSUANCE OF THE CERTIFICATE OF OCCUPANCY.
3. AN IDENTICAL COPY OF THIS AS-BUILT AND CERTIFICATION SHALL BE SENT TO THE RIDEM WATER RESOURCES, WETLAND SECTION UPON ITS COMPLETION.

PROPOSED PAVEMENT STRUCTURE:

(SEE ROADWAY TYPICAL SECTION FOR PAVEMENT MAKEUP)

PROPOSED PAVEMENT STRUCTURE:
(DIAMOND HILL ROAD - RIDOT)

2" MODIFIED CLASS 12.5 HMA
3" CLASS 19 HMA
12" GRAVEL BORROW SUBBASE COURSE

ASPHALT EMULSION TACK COAT BETWEEN HMA LAYERS AND ON VERTICAL FACES.

LAYOUT NOTE:

THE LAYOUT SHOWN REPRESENTS A GRAPHICAL DESIGN, AND PRIOR TO THE CONSTRUCTION, THE CONTRACTOR SHALL ENGAGE A PROFESSIONAL LAND SURVEYOR (PLS) REGISTERED IN THE STATE OF RHODE ISLAND TO SET AND VERIFY ALL LINES AND GRADES. ALL EXISTING UTILITY LOCATIONS AND ELEVATIONS ARE TO BE CONFIRMED BY THE CONTRACTOR PRIOR TO CONSTRUCTION. ANY ITEMS FOUND WHICH DO NOT MATCH THE PLANS MUST BE BROUGHT TO THE ENGINEERS ATTENTION PRIOR TO CONSTRUCTION FOR REVIEW. NO WORK SHALL PROCEED UNTIL AUTHORIZED BY THE ENGINEER.

MAINTENANCE AND PROTECTION OF TRAFFIC NOTES:

1. THE CONTRACTOR SHALL BE RESPONSIBLE FOR ALL MAINTENANCE AND PROTECTION OF PEDESTRIAN AND VEHICULAR TRAFFIC INCLUDING POLICE PROTECTION DURING ALL CONSTRUCTION ACTIVITIES WITHIN ROADWAY RIGHT-OF-WAY.
2. ALL TRAFFIC CONTROL, TEMPORARY AND VEHICULAR SIGNS, BARRICADES AND LANE CLOSURES SHALL BE IN CONFORMANCE WITH THE LATEST REVISIONS OF MANUAL OF UNIFORM TRAFFIC CONTROL DEVICES (M.U.T.C.D.), 2009 EDITION, INCLUDING ALL REVISIONS.
3. TEMPORARY CONSTRUCTION SIGNS AND ALL APPLICABLE TRAFFIC CONTROL DEVICES SHALL BE IN PLACE PRIOR TO THE START OF WORK IN ANY AREA OPEN TO TRAFFIC.
4. THE PRIVATE VEHICLES OF CONSTRUCTION WORKERS SHALL NOT BE PARKED IN THE STATE OR CITY RIGHT-OF-WAY.
5. ALL MAINTENANCE AND PROTECTION OF TRAFFIC CONTROL SETUPS, SIGNS CHANNELING DEVICES, ETC, SHALL BE IN ACCORDANCE WITH THE MANUAL OF UNIFORM TRAFFIC CONTROL DEVICES. 1988 EDITION. INCLUDING REVISION 3, SEPTEMBER 3, 1993 AND SUBSEQUENT ADDENDA.
6. SIGN MOUNTINGS SHALL BE IN ACCORDANCE WITH THE R.I.D.O.T. SPECIFICATIONS FOR TEMPORARY CONSTRUCTION SIGNS.

DRAINAGE AND SUBSURFACE DRAINAGE SYSTEM MAINTENANCE SCHEDULE:

UPON PROJECT COMPLETION, THE PROPERTY OWNER SHALL ADHERE TO THE FOLLOWING MAINTENANCE PLAN AND SCHEDULE:

1. CATCH BASINS, MANHOLES AND DRAIN LINES: AN INSPECTION MUST OCCUR ON AN ANNUAL BASIS BY QUALIFIED PERSONAL TO ENSURE PROPER OPERATION. ANY DEFICIENCY NOTED DURING THE INSPECTION WILL BE IMMEDIATELY REPAIRED OR REPLACED. THE INSPECTION SHOULD, AS A MINIMUM, CONCENTRATE ON THE FOLLOWING:
   * DAMAGE TO GRATE/ COVERS
   * EVIDENCE OF STANDING WATER
   * DEBRIS REMOVAL
   * STRUCTURAL ALIGNMENT/ INTEGRITY
   * OIL/WATER SEPARATORS
2. IF SEDIMENT OR ORGANIC DEBRIS BUILD-UP HAS LIMITED THE INFILTRATION CAPABILITIES OF THE UNDERGROUND INFILTRATION CHAMBERS OR TRENCHES TO BELOW THE DESIGN RATE THE SYSTEM MUST BE REMOVED AND RE-CONSTRUCTED. THE SYSTEMS BOTTOM SHOULD BE RESTORED ACCORDING TO ORIGINAL DESIGN SPECIFICATIONS.
3. SEDIMENT REMOVAL: ALL REMOVED SEDIMENT IS TO BE TESTED TO DETERMINE POLLUTANT CONTENT. THE SEDIMENT IS TO BE PROPERLY DISPOSED IN UPLAND AREAS BASED UPON THE TEST RESULTS AND LOCAL, STATE, AND FEDERAL REGULATIONS.
4. THE PROPERTY OWNER IS RESPONSIBLE FOR ANY SOIL AND GROUNDWATER CONTAMINATION RESULTING FROM THE USE OF THE STORMWATER RUNOFF SUBSURFACE DRAINAGE SYSTEM.

WATER NOTES:

1. ALL INSTALLATIONS, JOINTS, CONSTRUCTION METHODS AND MATERIALS SHALL BE ACCORDING TO THE WOONSOCKET WATER DEPARTMENT REQUIREMENTS, AWWA STANDARDS AND GOVERNMENTAL REQUIREMENTS.
2. INSTALLATION OF ALL WATER CONVEYANCES, MAINS, PIPES OR LINES SHALL BE IN ACCORDANCE WITH THE DUCTILE IRON PIPE RESEARCH ASSOCIATION'S INSTALLATION MANUAL AND ANSI/AWWA C600 AND ALL OTHER REQUIREMENTS OF THE WOONSOCKET WATER DEPARTMENT.
3. WATER PIPES SHALL TYPICALLY BE LOCATED AT LEAST TEN (10) FEET HORIZONTALLY FROM SEWER PIPES, AND AT A MINIMUM DEPTH OF COVER EQUAL TO 5'-0". WHERE A NEW WATER PIPE IS LESS THAN 18 INCHES CLEAR DISTANCE ABOVE A SEWER OR WHERE A WATER PIPE PASSES BENEATH A SEWER OR STORM DRAIN, ENCASE THE SEWER OR DRAIN IN 6" OF CONCRETE FOR A DISTANCE OF 10 FEET ON EACH SIDE OF THE CROSSING WATER PIPE.
4. ALL SYSTEM COMPONENTS AND CONSTRUCTION METHODS; SUCH AS PIPE, THRUST BLOCKS, FITTINGS, CASTINGS, ETC. SHALL BE SUBMITTED TO THE ENGINEER FOR APPROVAL PRIOR TO PURCHASE AND INSTALLATION. THIS SUBMISSION SHALL INCLUDE MANUFACTURER'S LITERATURE, SHOP DRAWINGS, PROPOSED CONSTRUCTION METHODS, ETC.
5. WATER LINE TRENCH TO BE AWWA TYPE 5 A METALIZED DETECTABLE IDENTIFICATION TAPE 2" IN WIDTH, BLUE IN COLOR AND PRINTED WITH "CAUTION WATERLINE BURIED BELOW" SHALL BE UTILIZED OVER ALL MAINS. TAPE SHALL BE SET AT APPROXIMATELY 1' BELOW FINISHED GRADE.
6. THE CONTRACTOR SHALL RECEIVE VERIFICATION FROM THE ENGINEER AS TO THE APPROPRIATE SIZE OF THE DOMESTIC WATER AND FIRE PROTECTION LINE SHOWN ON THE PLANS PRIOR TO ORDERING WATER PIPE RELATED ITEMS.
7. ALL SITE WORK, INCLUDING BUT NOT LIMITED TO, BITUMINOUS PAVEMENT, GRAVEL, STONE, DRAINAGE PIPE AND RELATED STRUCTURES, WATER, SEWER, AND DRAIN LINE INSTALLATION, PAVEMENT SAW CUTTING, ETC. SHALL CONFORM TO THE RHODE ISLAND DEPARTMENT OF TRANSPORTATION STANDARD SPECIFICATIONS FOR ROADWAY AND BRIDGE CONSTRUCTION AMENDED AUGUST 2013 WITH ALL REVISIONS AND LATEST ADDENDA. STANDARD DETAILS FOR THIS WORK ARE RI STANDARD DETAILS 1998 EDITION WITH ALL REVISIONS.
8. SPECIFIC BENDS ARE SHOWN ON THE DRAWINGS. THE CONTRACTOR SHALL PROVIDE ADDITIONAL BENDS AS NECESSARY TO INSTALL THE PIPE AT THE REQUIRED DEPTH AND ALIGNMENT.
9. INSPECTION OF ALL INSTALLATIONS SHALL BE CONDUCTED TO ENSURE COMPLIANCE WITH THE RULES AND REGULATIONS OF THE WOONSOCKET WATER DEPARTMENT. WOONSOCKET WATER EMPLOYEES SHALL BE GIVEN FULL ACCESS TO THE PROJECT AT ALL TIMES FOR INSPECTION OR OBSERVATION OF CONSTRUCTION IN PROGRESS AS DEEMED NECESSARY BY THE AUTHORITY. FAILURE TO CONSTRUCT THE NEW EXTENSION OF THE SYSTEM AS PER THE APPROVED DESIGN DRAWINGS OR WOONSOCKET WATER DEPARTMENT'S RULES AND REGULATIONS WILL CAUSE IMMEDIATE CESSATION OF ALL CONSTRUCTION WORK. INSPECTION FEES MUST BE PAID IN FULL PRIOR TO COMMENCING INSTALLATION WORK.

RIDOT

1. ALL WORK TO BE DONE WITHIN THE STATE RIGHT-OF-WAY SHALL CONFORM TO THE RHODE ISLAND DEPARTMENT OF TRANSPORTATION STANDARD SPECIFICATIONS FOR ROADWAY AND BRIDGE CONSTRUCTION AMENDED AUGUST 2013 WITH ALL REVISIONS AND LATEST ADDENDA. STANDARD DETAILS FOR THIS WORK ARE RI STANDARD DETAILS 1998 EDITION WITH ALL REVISIONS.
2. A SEPARATE RIDOT UTILITY PERMIT APPLICATION AND APPROVAL IS REQUIRED FOR ANY UTILITY WORK (INCLUDING SEWER, WATER, GAS, ELECTRIC, ETC.) WITHIN THE STATE RIGHT-OF-WAY TO BE OBTAINED BY THE CONTRACTOR PRIOR TO CONSTRUCTION.

MAY 10 2018

Kindly be advised that this Permit is not equivalent to a verification of the type or extent of freshwater wetlands on site.

LEGEND

EXISTING PROPERTY LINE
ABUTTING PROPERTY LINE
BUILDING SETBACK LINE
WETLAND EDGE
100 EXISTING CONTOUR
100 PROPOSED CONTOUR
EXISTING STONE WALL
IRON ROD
DRILL HOLE
CONCRETE BOUND
EXISTING CURB
CHAIN LINK FENCE
DRAIN LINE
DRAINAGE MANHOLE
CATCH BASIN
UTILITY POLE
OVERHEAD WIRES
UNDERGROUND ELECTRIC
GAS LINE
WATER LINE
WATER SHUT OFF VALVE
GV GAS VALVE
SEWER
SMH
N/F NOW OR FORMERLY
LOD LIMIT OF DISTURBANCE
TP SOIL EVALUATION
BUILDING DOOR LOCATION
CUT AND MATCH LINE (SAW CUT)
HANDICAPPED PARKING
STOP SIGN
ELECTRIC SIGN
PAINTED TRAFFIC ARROW
LIGHT POLE
C/O CLEAN OUT
x 308.5 SPOT GRADE
AD ASPHALT DRIVE
GD GRAVEL DRIVE
(T) APPROXIMATE CELL TOWER

DEPARTMENT OF ENVIRONMENTAL MANAGEMENT
OFFICE OF WATER RESOURCES
FRESHWATER WETLANDS PROGRAM
APPROVED WITH CONDITIONS
AS SPECIFIED IN THE LETTER OF APPROVAL
DATED JUL 13 2018 FILE # 17-0255
NO CHANGES ALLOWED WITHOUT PRIOR APPROVAL
APPROVED PLANS MUST BE AT CONSTRUCTION SITE
Martin D. Wencek

REVISIONS:	
NO. DATE.	DESCRIPTION
1. 8-23-17	City Engineering Review Comments of 8-3-17
2. 12-1-17	RIDOT Review Comments of 11-20-17
3. 12-12-17	RIDEM Review Comments of 11-30-17
4. 5-9-18	RIDEM Review Comments of 5-8-18
DESIGNED BY:	DMD
CHECKED BY:	DMD
DATE:	7-1-17
PROJECT NO:	15-0001-11

SAPPHIRE ESTATES
MAJOR SUBDIVISION OF LAND PROJECT
MAP B6, LOTS 38-13 & 38-524
DIAMOND HILL ROAD AND WILCOX STREET
WOONSOCKET, RHODE ISLAND

DAVID M. D'AMICO
No. 6749
REGISTERED PROFESSIONAL ENGINEER
CIVIL
5/8/18

DEtec.
D'AMICO ENGINEERING TECHNOLOGY, INC.
Civil · Transportation · Land Use
2080 Mineral Spring Ave., North Providence, RI 02911
(401) 622-1470 (401) 353-1190 fax www.dengineeringtec.com

PERMIT PLANS, NOT FOR CONSTRUCTION

GENERAL NOTES AND LEGEND

SHEET 2 OF 14

N:\D'Amico Engineering Technology, Inc\15-0001 Marc N Nyberg\11 Diamond Hill Rd Subdivision\Sapphire Estates Subdivision Permit Plan Set 3-22-18 Rev 1.dwg May. 09, 2018 3:19pm

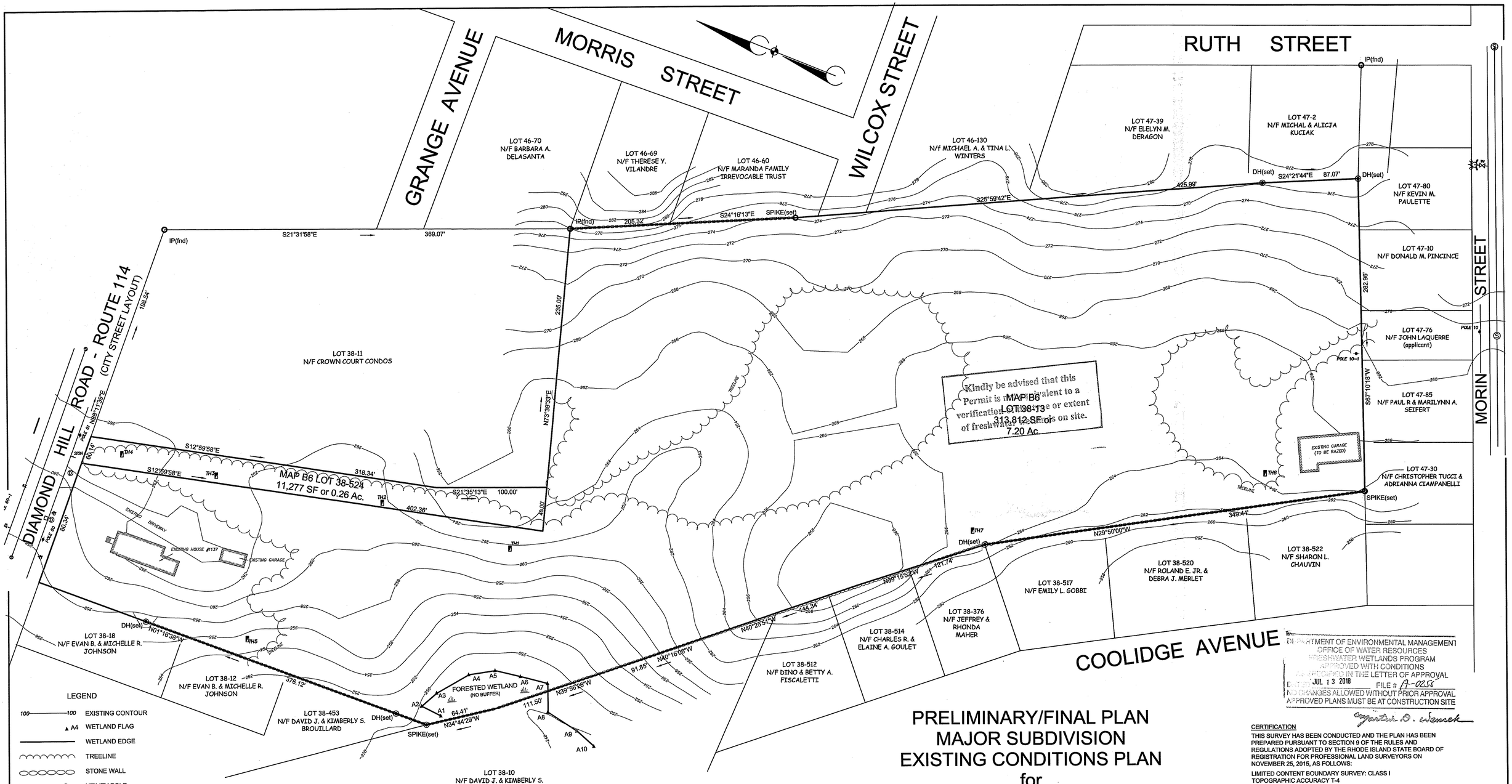

LEGEND

- 100 — 100 EXISTING CONTOUR
- ▲ A4 WETLAND FLAG
- WETLAND EDGE
- TREELINE
- STONE WALL
- UTILITY POLE
- DRAIN MANHOLE
- SEWER MANHOLE
- HYDRANT
- WATER VALVE
- SEWER LINE
- WATER LINE
- GAS LINE

ZONING DISTRICT: R3
MIN. AREA: 7,000 SF
MIN. FRONTAGE: 70'
MIN. LOT WIDTH AT BUILDING LINE: 70'
MIN. LOT COVERAGE: 35%
MIN. BUILDING HEIGHT: 30'
MIN. SETBACKS: FRONT: 20'
SIDE: 10'
REAR: 25'

NOTES:

1. OWNER/APPLICANT: JOHN LAQUERRE
276 SAINT IOUIS AVENUE, WOONSOCKET, RI 02895
2. SITE IS NOT WITHIN ANY FLOOD HAZARD ZONE AS SHOWN ON FLOOD INSURANCE RATE MAP PANEL 88 OF 451, MAP NUMBER 44007C0088G, EFFECTIVE DATE: MARCH 2, 2009.
3. WETLAND DELINEATION BY: NATURAL RESOURCE SERVICES, INC.
4. ELEVATIONS ARE BASED UPON NAVD88.

TEST HOLE DATA
DATE: 3-29-17

TH1
0-10" Ap, SL, 10YR 3/2
10"-36" Bw, SL, 10YR 5/4
36"-60" C, G, CB, SL, 5YR 5/3
60"-108" C2, G, CB, SL, 10YR 4/2
ESHWT: 108"
NO LEDGE AT 108"

TH2
0-6" Ap, SL, 10YR 3/2
6"-24" Bw, SL, 10YR 4/6
24"-32" C, G, CB, SL, 10YR 5/3
32"-108" C2, G, CB, SL, 10YR 4/3
ESHWT: 60"
NO LEDGE AT 108"

TH3
0-6" Ap, SL, 10YR 3/2
6"-30" Bw, SL, 10YR 5/4
30"-60" C, G, CB, SL, 5YR 5/3
60"-108" C2, G, CB, SL, 10YR 4/3
ESHWT: 30"
NO LEDGE AT 108"

TH4
0-30" FILL
30"-36" Ap, SL, 10YR 3/2
36"-48" C, FSL, 5YR 5/3
48"-108" C2, G, SL, 10YR 4/3
ESHWT: 10"
NO LEDGE AT 108"

TEST HOLE DATA TH5 – TH7
DATE: 10-23-17

TH5
0-8" Ap, SL, 10YR 3/4
8"-24" Bw1, SL, 10YR 4/6
24"-48" Bw2, SL, 10YR 5/6
48"-108" C, 10YR 5/3
ESHWT: 96"
NO LEDGE AT 108"

TH6
0-8" Ap, SL, 10YR 4/4
8"-14" Bw1, FSL, 10YR 5/6
14"-26" Bw2, FSL, 2.5YR 6/3
26"-96" C, G, CB, LS, 2.5YR 5/3
ESHWT: 96"
NO LEDGE AT 96"

TH7
0-6" Ap, SL, 10YR 4/4
6"-24" Bw1, FSL, 10YR 5/6
24"-40" Bw2, FSL, 10YR 6/3
40"-96" C, G, CB, LS 2.5YR 5/3
ESHWT: 96"
NO LEDGE AT 96"

PRELIMINARY/FINAL PLAN
MAJOR SUBDIVISION
EXISTING CONDITIONS PLAN
for
SAPPHIRE ESTATES
MAP B6, LOTS 38-13 & 38-524
DIAMOND HILL ROAD & WILCOX STREET
WOONSOCKET, RHODE ISLAND

JUNE, 2016
REVISED: DECEMBER 11, 2017
REVISED: MAY 9, 2018

GRAPHIC SCALE
0' 40' 80' 120'

DEPARTMENT OF ENVIRONMENTAL MANAGEMENT
OFFICE OF WATER RESOURCES
FRESHWATER WETLANDS PROGRAM
APPROVED WITH CONDITIONS
AS SPECIFIED IN THE LETTER OF APPROVAL
DATE JUL 13 2018 FILE # A-0255
NO CHANGES ALLOWED WITHOUT PRIOR APPROVAL
APPROVED PLANS MUST BE AT CONSTRUCTION SITE
Jennifer D. Wenck

CERTIFICATION
THIS SURVEY HAS BEEN CONDUCTED AND THE PLAN HAS BEEN PREPARED PURSUANT TO SECTION 9 OF THE RULES AND REGULATIONS ADOPTED BY THE RHODE ISLAND STATE BOARD OF REGISTRATION FOR PROFESSIONAL LAND SURVEYORS ON NOVEMBER 25, 2015, AS FOLLOWS:

LIMITED CONTENT BOUNDARY SURVEY: CLASS I
TOPOGRAPHIC ACCURACY T-4

STATEMENT OF PURPOSE
THE PURPOSE FOR THE CONDUCT OF THE SURVEY AND THE PREPARATION OF THE PLAN IS AS FOLLOWS: 28 LOT SUBDIVISION

BY: Marc N. Nyberg
MARC N. NYBERG License No. 1797 COA No.: A52

MARC N. NYBERG
No. 1797
PROFESSIONAL LAND SURVEYOR

Marc N. Nyberg Associates, Inc.
Land Surveyors
Planners
GPS
501 Great Road
Unit 104
North Smithfield, RI 02896
Tel: (401) 762-2870
Fax: (401) 762-2871
Email: mail@marcnyberg.com

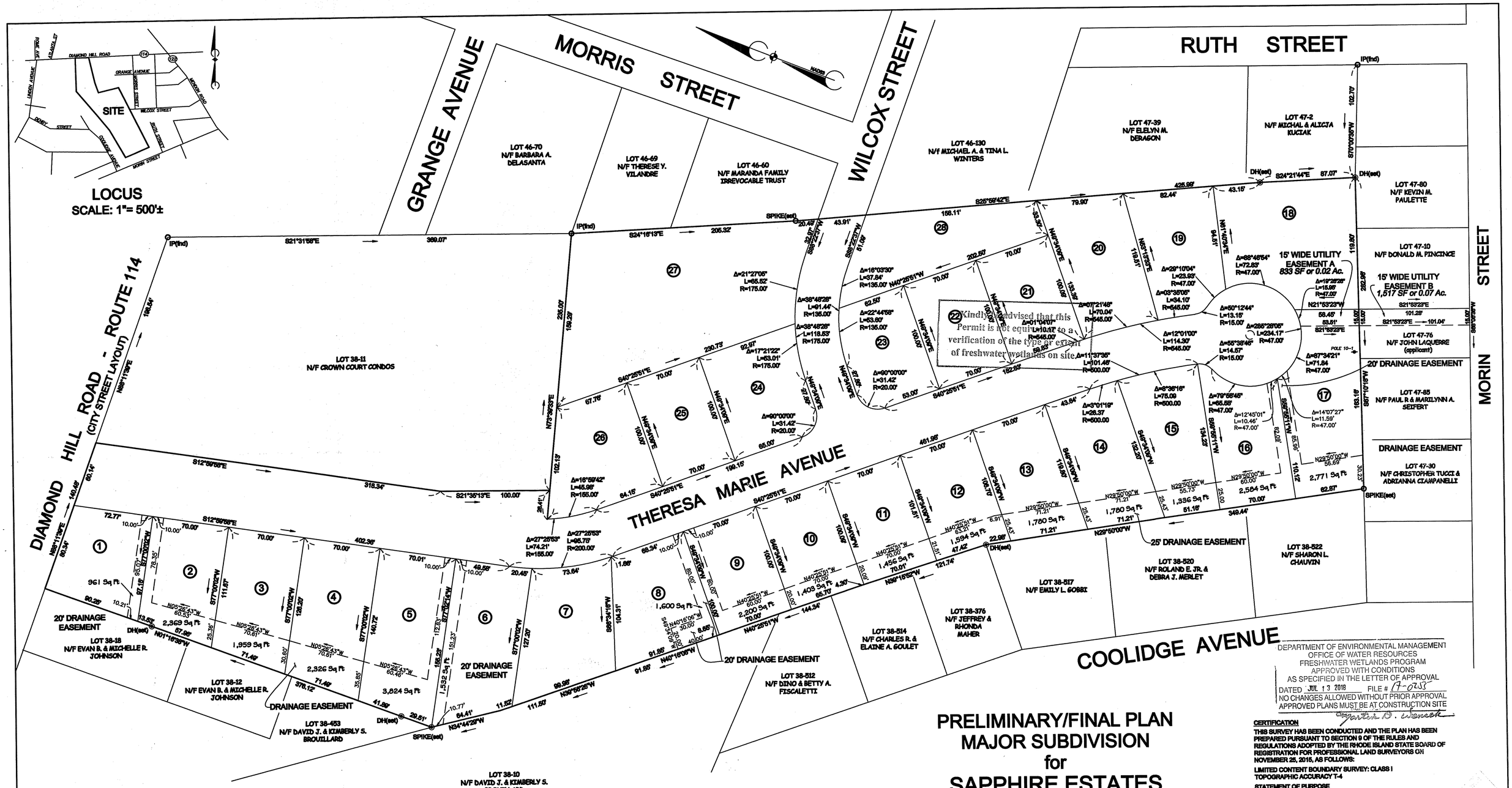

DEPARTMENT OF ENVIRONMENTAL MANAGEMENT
OFFICE OF WATER RESOURCES
FRESHWATER WETLANDS PROGRAM
APPROVED WITH CONDITIONS
AS SPECIFIED IN THE LETTER OF APPROVAL
DATED JUL 13 2018 FILE # 17-0233
NO CHANGES ALLOWED WITHOUT PRIOR APPROVAL
APPROVED PLANS MUST BE AT CONSTRUCTION SITE

PRELIMINARY/FINAL PLAN
MAJOR SUBDIVISION
for
SAPPHIRE ESTATES
MAP B6, LOTS 38-13 & 38-524
DIAMOND HILL ROAD & WILCOX STREET
WOONSOCKET, RHODE ISLAND
DECEMBER 11, 2017
SCALE: 1 INCH EQUALS 40 FEET

GRAPHIC SCALE
0' 40' 80' 120'

ZONING DISTRICT: R3
MIN. AREA: 7,000 SF
MIN. FRONTAGE: 70'
MIN. LOT WIDTH AT BUILDING LINE: 70'
MIN. LOT COVERAGE: 35%
MIN. BUILDING HEIGHT: 30'
MIN. SETBACKS: FRONT: 20'
SIDE: 10'
REAR: 25'

NOTES:

1. OWNER/APPLICANT: JOHN LAQUERRE
276 SAINT LOUIS AVENUE, WOONSOCKET, RI 02895
2. SITE IS NOT WITHIN ANY FLOOD HAZARD ZONE AS SHOWN ON FLOOD INSURANCE RATE MAP PANEL 88 OF 451, MAP NUMBER 44007C0088G, EFFECTIVE DATE: MARCH 2, 2009.
3. THERE WILL TWO PHASES.
4. SITE IS COMPATIBLE WITH THE NEIGHBORHOOD WHICH IS DENSELY POPULATED. SITE WILL INGRESS/EGRESS ONTO MAIN ROADWAY (DIAMOND HILL ROAD, ROUTE 114).
5. WETLAND DELINEATION BY: NATURAL RESOURCE SERVICES, INC.
6. ELEVATIONS ARE BASED UPON NAVD88.

CERTIFICATION
THIS SURVEY HAS BEEN CONDUCTED AND THE PLAN HAS BEEN PREPARED PURSUANT TO SECTION 9 OF THE RULES AND REGULATIONS ADOPTED BY THE RHODE ISLAND STATE BOARD OF REGISTRATION FOR PROFESSIONAL LAND SURVEYORS ON NOVEMBER 25, 2015, AS FOLLOWS:

LIMITED CONTENT BOUNDARY SURVEY: CLASS I
TOPOGRAPHIC ACCURACY T-4

STATEMENT OF PURPOSE
THE PURPOSE FOR THE CONDUCT OF THE SURVEY AND THE PREPARATION OF THE PLAN IS AS FOLLOWS: 28 LOT SUBDIVISION

BY: Marc N. Nyberg

MARC N. NYBERG License No. 1797 COA No.: A52

RECEIVED DEC 13 2017

MARC N. NYBERG No. 1797 PROFESSIONAL LAND SURVEYOR

Marc N. Nyberg Associates, Inc.
Land Surveyors
Planners
GPS
501 Great Road
Unit 104
North Smithfield, RI 02896
Tel: (401) 762-2870
Fax: (401) 762-2871
Email: mail@marcnyberg.com

16–118

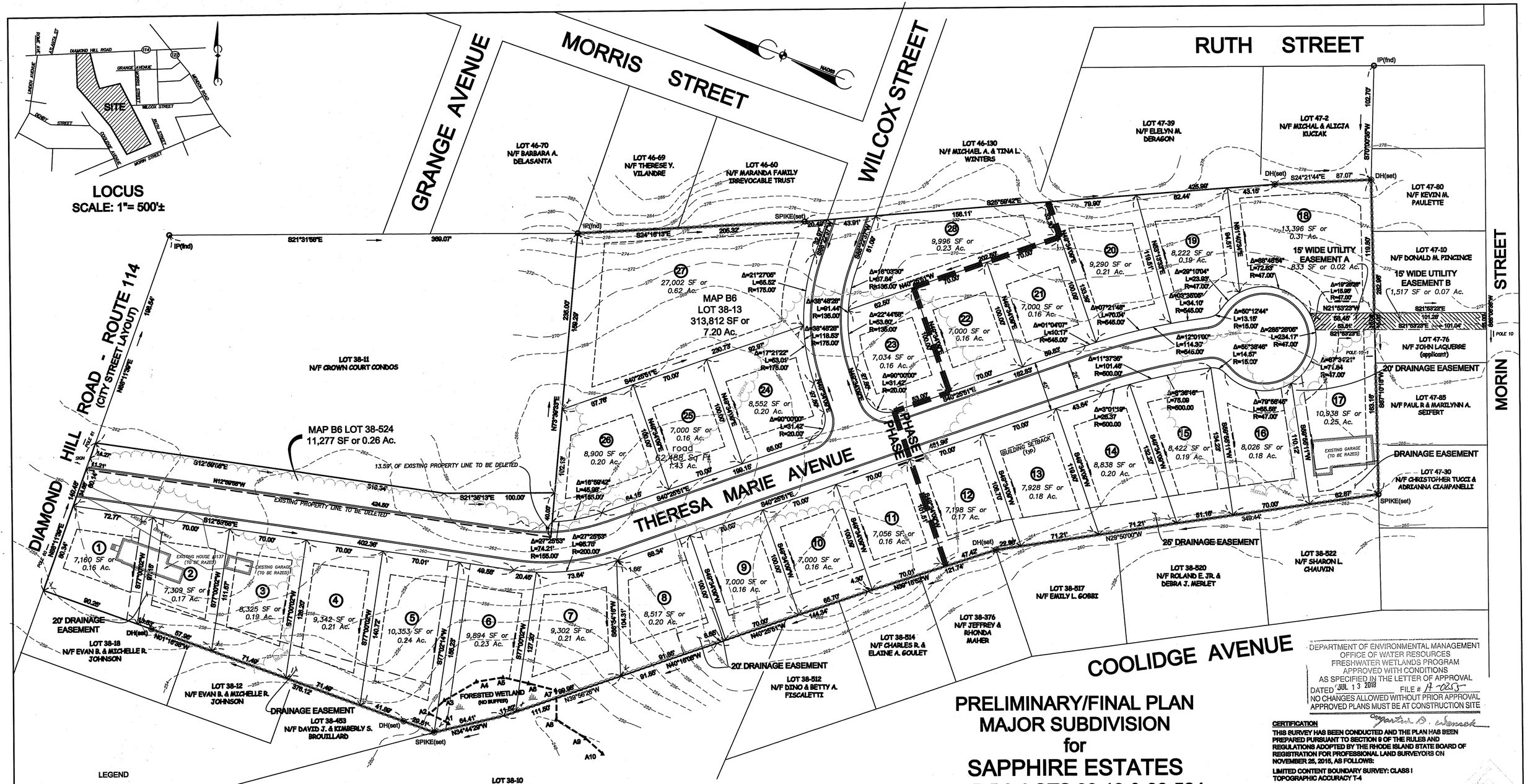

LEGEND

- 100 — — — 100 EXISTING CONTOUR
- ▲ A4 WETLAND FLAG
- WETLAND EDGE
- TREELINE
- STONE WALL
- UTILITY POLE

ZONING DISTRICT: R3
MIN. AREA: 7,000 SF
MIN. FRONTAGE: 70'
MIN. LOT WIDTH AT BUILDING LINE: 70'
MIN. LOT COVERAGE: 35%
MIN. BUILDING HEIGHT: 30'
MIN. SETBACKS: FRONT: 20'
SIDE: 10'
REAR: 25'

NOTES:

1. OWNER/APPLICANT: JOHN LAQUERRE
276 SAINT LOUIS AVENUE, WOONSOCKET, RI 02895
2. SITE IS NOT WITHIN ANY FLOOD HAZARD ZONE AS SHOWN ON FLOOD INSURANCE RATE MAP PANEL 88 OF 451, MAP NUMBER 44007C0088G, EFFECTIVE DATE: MARCH 2, 2009.
3. THERE WILL TWO PHASES.
4. SITE IS COMPATIBLE WITH THE NEIGHBORHOOD WHICH IS DENSELY POPULATED. SITE WILL INGRESS/EGRESS ONTO MAIN ROADWAY (DIAMOND HILL ROAD, ROUTE 114) .
5. WETLAND DELINEATION BY: NATURAL RESOURCE SERVICES, INC.
6. ELEVATIONS ARE BASED UPON NAVD88.

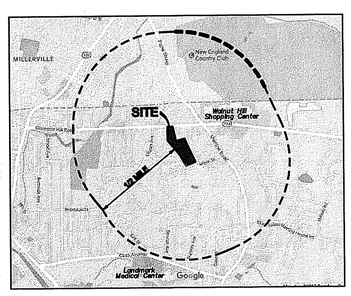

1/2 MILE RADIUS
SCALE: 1"= 2,000'±

Kindly be advised that this Permit is not equivalent to a verification of the type or extent of freshwater wetlands on site.

PRELIMINARY/FINAL PLAN
MAJOR SUBDIVISION
for
SAPPHIRE ESTATES
MAP B6, LOTS 38-13 & 38-524
DIAMOND HILL ROAD & WILCOX STREET
WOONSOCKET, RHODE ISLAND
NOVEMBER 30, 2016

REVISED: DECEMBER 22, 2016
JANUARY 23, 2017
MARCH 7, 2017
MARCH 23, 2017
MAY, 30, 2017
JUNE 15, 2017
JUNE 27, 2017
OCTOBER 4, 2017
DECEMBER 11, 2017

SCALE: 1 INCH EQUALS 40 FEET

GRAPHIC SCALE
0' 40' 80' 120'

DEPARTMENT OF ENVIRONMENTAL MANAGEMENT
OFFICE OF WATER RESOURCES
FRESHWATER WETLANDS PROGRAM
APPROVED WITH CONDITIONS
AS SPECIFIED IN THE LETTER OF APPROVAL
DATED JUL 13 2018 FILE # A-0255
NO CHANGES ALLOWED WITHOUT PRIOR APPROVAL
APPROVED PLANS MUST BE AT CONSTRUCTION SITE

CERTIFICATION
THIS SURVEY HAS BEEN CONDUCTED AND THE PLAN HAS BEEN PREPARED PURSUANT TO SECTION 9 OF THE RULES AND REGULATIONS ADOPTED BY THE RHODE ISLAND STATE BOARD OF REGISTRATION FOR PROFESSIONAL LAND SURVEYORS ON NOVEMBER 25, 2015, AS FOLLOWS:
LIMITED CONTENT BOUNDARY SURVEY: CLASS I
TOPOGRAPHIC ACCURACY T-4

STATEMENT OF PURPOSE
THE PURPOSE FOR THE CONDUCT OF THE SURVEY AND THE PREPARATION OF THE PLAN IS AS FOLLOWS: 28 LOT SUBDIVISION

BY: Marc N. Nyberg
MARC N. NYBERG License No. 1797 COA No.: A52

MARC N. NYBERG No. 1797 PROFESSIONAL LAND SURVEYOR

Marc N. Nyberg Associates, Inc.
Land Surveyors
Planners
GPS
501 Great Road
Unit 104
North Smithfield, RI 02896
Tel: (401) 762-2870
Fax: (401) 762-2871
Email: mail@marcnyberg.com

16–118

GENERAL SITE NOTES

1. ALL DWELLINGS ARE SINGLE FAMILY HOMES TO BE SERVICED BY PUBLIC WATER, SEWER AND GAS.
2. MONUMENTS (GRAINTE BOUNDARY MARKERS) SHALL BE SET AT EVERY CORNER AND ANGLE POINT ON THE BOUNDARY LINE OF THE SUBDIVISION AND AT EVERY ANGLE POINT OF CURVATURE ON THE PROPOSED STREET RIGHT-OF-WAY IN CONFORMANCE WITH THE CITY OF WOONSOCKET'S CURRENT LAND DEVELOPMENT AND SUBDIVISION REGULATIONS. ALSO, EACH LOT SHALL HAVE REBAR OR EQUIVALENT CORNER MARKER PLACED FLUSH WITH THE SURFACE OF THE GROUND. ALL GRANITE BOUNDS AND/OR MARKERS ARE TO BE SET BY A RI REGISTERED LAND SURVEYOR.
3. THE LOCATION AND AMOUNT OF 3 OR 2 BEDROOM HOMES WITHIN THE DEVELOPMENT FOR EACH LOT IS AN APPROXIMATION FOR DESIGN PURPOSE ONLY. FOR CALCULATION PURPOSES 3 BEDROOM HOMES HAVE BEEN UTILIZED. IT IS ANTICIPATED THAT THE MARKET AND BUYER PREFERENCE WILL DETERMINE THE FINAL NUMBER OF BEDROOMS PROPOSED ON EACH INDIVIDUAL LOT.
4. NEW ROADWAYS TO BE BUILT TO CITY OF WOONSOCKET SUBDIVISION REGULATIONS WITH 26' OF PAVEMENT, BITUMINOUS BERM, GRASS SIDEWALKS, AND UNDERGROUND TELEPHONE AND ELECTRIC LINES WITHIN A 45' WIDE RIGHT OF WAY.

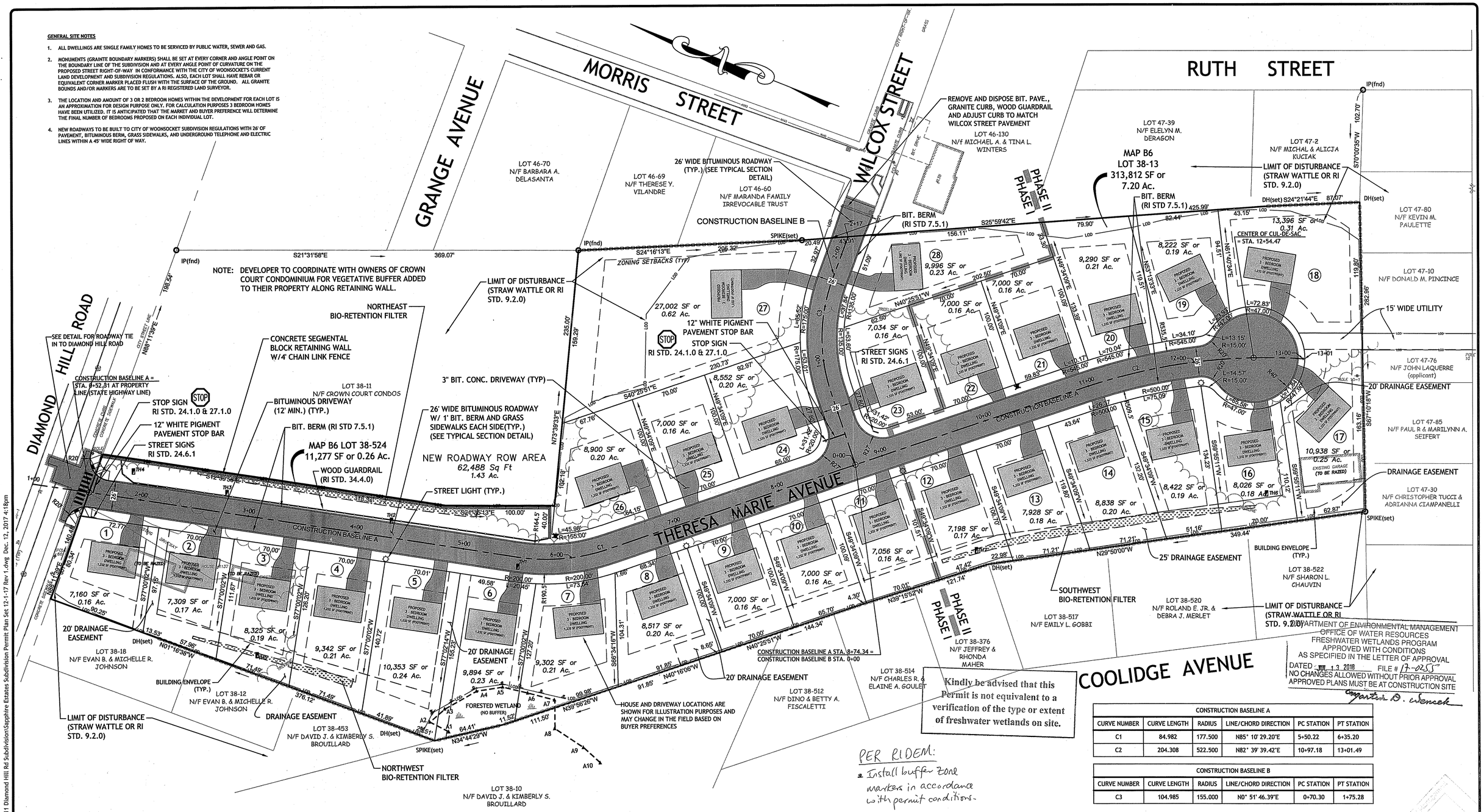

CONSTRUCTION BASELINE A					
CURVE NUMBER	CURVE LENGTH	RADIUS	LINE/CHORD DIRECTION	PC STATION	PT STATION
C1	84.982	177.500	N85° 10' 29.20"E	5+50.22	6+35.20
C2	204.308	522.500	N82° 39' 39.42"E	10+97.18	13+01.49

CONSTRUCTION BASELINE B					
CURVE NUMBER	CURVE LENGTH	RADIUS	LINE/CHORD DIRECTION	PC STATION	PT STATION
C3	104.985	155.000	N0° 51' 46.39"E	0+70.30	1+75.28

ZONING INFORAMTION TABLE:

ZONING CRITERIA	REQUIRED	EXIST. LOT 13	PROPOSED (27 LOTS)
ZONING DISTRICT	R3	R3	R3
MINIMUM LOT AREA	7,000 SF	313,812 SF	> 7,000 SF
MINIMUM LOT FRONTAGE	70'	115'	> 70'
MIN. FRONT YARD SETBACK	20'	51.8'	> 20'
MIN. SIDE YARD SETBACK	10'	48'	> 10'
MIN. REAR YARD SETBACK	25'	1,080.5'	> 25'
MAXIMUM BUILDING HEIGHT	30'	< 30'	< 30'
MAXIMUM LOT COVERAGE	35%	1%	< 35%

REVISIONS:

NO.	DATE.	DESCRIPTION
1.	8-23-17	City Engineering Review Comments of 8-3-17
2.	12-1-17	RIDOT Review Comments of 11-20-17
3.	12-12-17	RIDEM Review Comments of 11-30-17

DESIGNED BY: DMD
DRAWN BY:
CHECKED BY: DMD
DATE: 7-1-17
PROJECT NO: 15-0001-11

SAPPHIRE ESTATES
MAJOR SUBDIVISION OF LAND PROJECT
MAP B6, LOTS 38-13 & 38-524
DIAMOND HILL ROAD AND WILCOX STREET
WOONSOCKET, RHODE ISLAND

DAVID M. D'AMICO No. 6749 REGISTERED PROFESSIONAL ENGINEER CIVIL
12/12/17

D'AMICO ENGINEERING TECHNOLOGY, INC.
Civil · Transportation · Land Use
2080 Mineral Spring Ave., North Providence, RI 02911
(401) 622-1470 (401) 353-1190 fax www.dengineeringtec.com

PERMIT PLANS, NOT FOR CONSTRUCTION

SITE PLAN

SHEET 6 OF 14

N:\D'Amico Engineering Technology, Inc\15-0001 Marc N Nyberg\11 Diamond Hill Rd Subdivision\Sapphire Estates Subdivision Permit Plan Set 12-1-17 Rev 1.dwg Dec. 12, 2017 4:18pm

NOTE:
THE LOCATION AND DEPTHS OF EXISTING UTILITIES ARE APPROXIMATE AND HAVE BEEN PLOTTED FROM THE LATEST AVAILABLE INFORMATION. THE UTILITY LOCATIONS ARE APPROXIMATE AND MAY NOT BE ALL INCLUSIVE. THE CONTRACTOR SHALL CHECK AND VERIFY THE LOCATION OF ALL EXISTING UTILITIES, BOTH OVERHEAD AND UNDERGROUND, AND "DIG-SAFE" MUST BE NOTIFIED PRIOR TO COMMENCING ANY CONSTRUCTION OPERATIONS. RESTORATION AND REPAIR OF DAMAGE TO EXISTING UTILITIES SHALL BE THE RESPONSIBILITY OF THE CONTRACTOR WITH NO ADDITIONAL COST TO THE OWNER. NO EXCAVATION SHALL COMMENCE UNTIL ALL INVOLVED UTILITY COMPANIES AND/OR TOWN WHOSE FACILITIES MIGHT BE AFFECTED BY ANY WORK TO BE PERFORMED BY THE CONTRACTOR ARE NOTIFIED AT LEAST 72 HOURS IN ADVANCED.

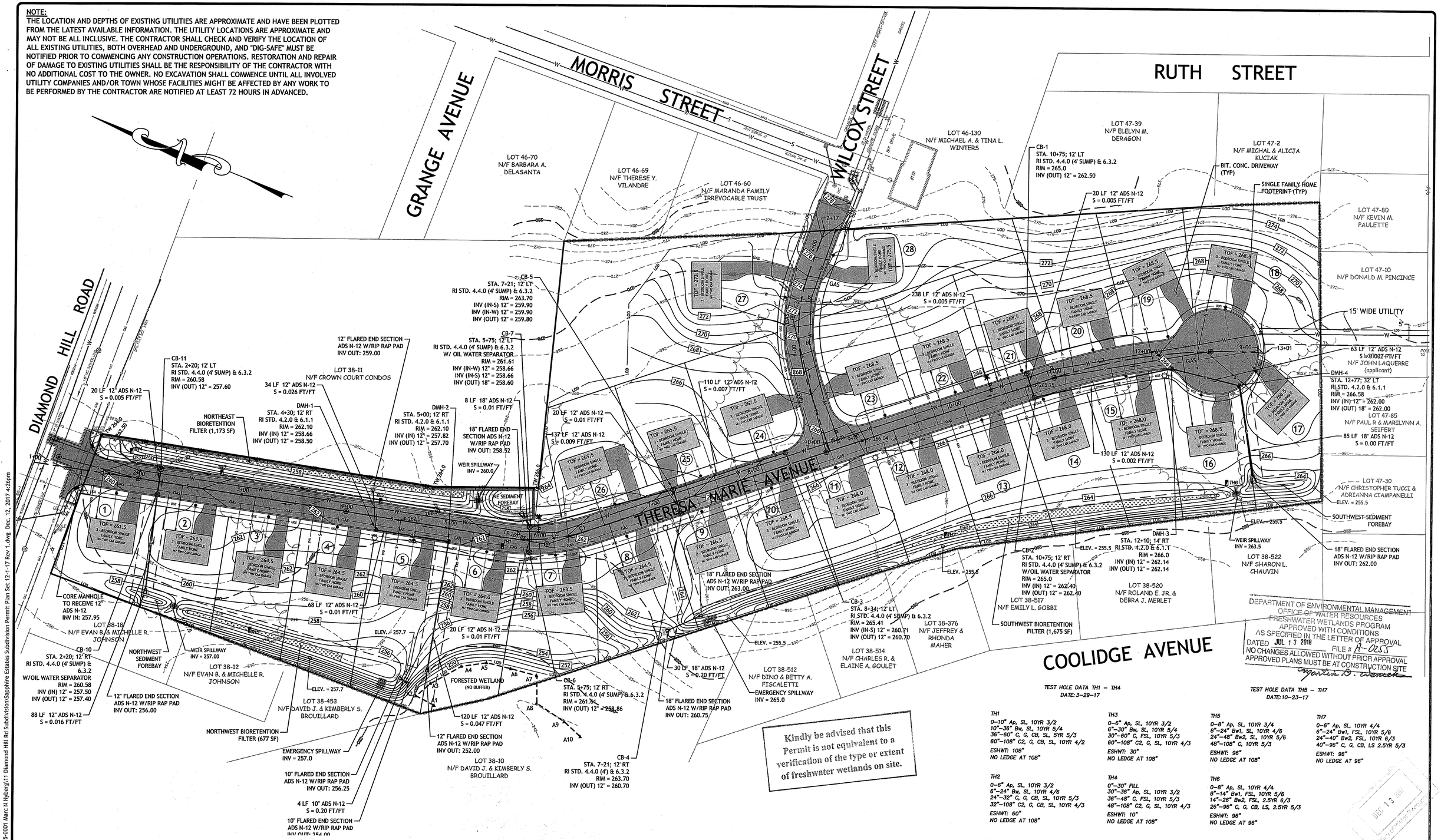
MORRIS STREET
WILCOX STREET
RUTH STREET
GRANGE AVENUE
DIAMOND HILL ROAD
THERESA MARIE AVENUE
COOLIDGE AVENUE
LOT 46-70 N/F BARBARA A. DELASANTA
LOT 46-69 N/F THERESE Y. VILANDRE
LOT 46-60 N/F MARANDA FAMILY IRREVOCABLE TRUST
LOT 46-130 N/f MICHAEL A. & TINA L. WINTERS
LOT 47-39 N/F ELELYN M. DERAGON
LOT 47-2 N/F MICHAL & ALICJA KUCIAK
LOT 47-80 N/F KEVIN M. PAULETTE
LOT 47-10 N/F DONALD M. PINCINCE
LOT 47-85 N/F PAUL R & MARILYNN A. SEIFERT
LOT 47-30 N/F CHRISTOPHER TUCCI & ADRIANNA CIAMPANELLI
LOT 38-11 N/F CROWN COURT CONDOS
LOT 38-18 N/F EVAN B. & MICHELLE R. JOHNSON
LOT 38-12 N/F EVAN B. & MICHELLE R. JOHNSON
LOT 38-453 N/F DAVID J. & KIMBERLY S. BROUILLARD
LOT 38-10 N/F DAVID J. & KIMBERLY S. BROUILLARD
LOT 38-517 N/F EMILY L. GOBBI
LOT 38-520 N/F ROLAND E. JR. & DEBRA J. MERLET
LOT 38-522 N/F SHARON L. CHAUVIN
LOT 38-376 N/F JEFFREY & RHONDA MAHER
LOT 38-514 N/F CHARLES R. & ELAINE A. GOULET
LOT 38-512 N/F DINO & BETTY A. FISCALETTI
FORESTED WETLAND (NO BUFFER)
NORTHEAST BIORETENTION FILTER (1,173 SF)
NORTHWEST BIORETENTION FILTER (677 SF)
SOUTHWEST BIORETENTION FILTER (1,675 SF)
NORTHWEST SEDIMENT FOREBAY
NE SEDIMENT FOREBAY
SOUTHWEST SEDIMENT FOREBAY
CORE MANHOLE TO RECEIVE 12" ADS N-12 INV IN: 257.95
CB-10 STA. 2+20; 12' RT RI STD. 4.4.0 (4' SUMP) & 6.3.2 W/OIL WATER SEPARATOR RIM = 260.58 INV (IN) 12" = 257.50 INV (OUT) 12" = 257.40
CB-11 STA. 2+20; 12' LT RI STD. 4.4.0 (4' SUMP) & 6.3.2 RIM = 260.58 INV (OUT) 12" = 257.60
CB-5 STA. 7+21; 12' LT RI STD. 4.4.0 (4' SUMP) & 6.3.2 RIM = 263.70 INV (IN-S) 12" = 259.90 INV (IN-W) 12" = 259.90 INV (OUT) 12" = 259.80
CB-7 STA. 5+75; 12' LT RI STD. 4.4.0 (4' SUMP) & 6.3.2 W/ OIL WATER SEPARATOR RIM = 261.61 INV (IN-W) 12" = 258.66 INV (IN-S) 12" = 258.66 INV (OUT) 18" = 258.60
CB-6 STA. 5+75; 12' RT RI STD. 4.4.0 (4' SUMP) & 6.3.2 RIM = 261.34 INV (OUT) 12" = 258.86
CB-4 STA. 7+21; 12' RT RI STD. 4.4.0 (4') & 6.3.2 RIM = 263.70 INV (OUT) 12" = 260.70
CB-3 STA. 8+34; 12' LT RI STD. 4.4.0 (4' SUMP) & 6.3.2 RIM = 265.41 INV (IN-S) 12" = 260.71 INV (OUT) 12" = 260.70
CB-1 STA. 10+75; 12' LT RI STD. 4.4.0 (4' SUMP) & 6.3.2 RIM = 265.0 INV (OUT) 12" = 262.50
CB-2 STA. 10+75; 12' RT RI STD. 4.4.0 (4' SUMP) & 6.3.2 W/OIL WATER SEPARATOR RIM = 265.0 INV (IN) 12" = 262.40 INV (OUT) 12" = 262.40
DMH-1 STA. 4+30; 12' RT RI STD. 4.2.0 & 6.1.1 RIM = 262.10 INV (IN) 12" = 258.66 INV (OUT) 12" = 258.50
DMH-2 STA. 5+00; 12' RT RI STD. 4.2.0 & 6.1.1 RIM = 262.10 INV (IN) 12" = 257.82 INV (OUT) 12" = 257.70
DMH-3 STA. 12+10; 14' RT RI STD. 4.2.0 & 6.1.1 RIM = 266.0 INV (IN) 12" = 262.14 INV (OUT) 12" = 262.14
DMH-4 STA. 12+77; 32' LT RI STD. 4.2.0 & 6.1.1 RIM = 266.58 INV (IN) 12" = 262.00 INV (OUT) 18" = 262.00
12" FLARED END SECTION ADS N-12 W/RIP RAP PAD INV OUT: 259.00
34 LF 12" ADS N-12 S = 0.026 FT/FT
20 LF 12" ADS N-12 S = 0.005 FT/FT
8 LF 18" ADS N-12 S = 0.01 FT/FT
18" FLARED END SECTION ADS N-12 W/RIP RAP PAD INV OUT: 258.52
WEIR SPILLWAY INV = 260.0
110 LF 12" ADS N-12 S = 0.007 FT/FT
137 LF 12" ADS N-12 S = 0.009 FT/FT
68 LF 12" ADS N-12 S = 0.01 FT/FT
20 LF 12" ADS N-12 S = 0.01 FT/FT
88 LF 12" ADS N-12 S = 0.016 FT/FT
12" FLARED END SECTION ADS N-12 W/RIP RAP PAD INV OUT: 256.00
WEIR SPILLWAY INV = 257.00
ELEV. = 257.7
120 LF 12" ADS N-12 S = 0.047 FT/FT
12" FLARED END SECTION ADS N-12 W/RIP RAP PAD INV OUT: 252.00
EMERGENCY SPILLWAY INV = 257.0
10" FLARED END SECTION ADS N-12 W/RIP RAP PAD INV OUT: 256.25
4 LF 10" ADS N-12 S = 0.20 FT/FT
10" FLARED END SECTION ADS N-12 W/RIP RAP PAD INV OUT: 254.00
18" FLARED END SECTION ADS N-12 W/RIP RAP PAD INV OUT: 263.00
30 LF 18" ADS N-12 S = 0.20 FT/FT
18" FLARED END SECTION ADS N-12 W/RIP RAP PAD INV OUT: 260.75
EMERGENCY SPILLWAY INV = 265.0
238 LF 12" ADS N-12 S = 0.005 FT/FT
20 LF 12" ADS N-12 S = 0.005 FT/FT
130 LF 12" ADS N-12 S = 0.002 FT/FT
63 LF 12" ADS N-12 S = 0.0002 FT/FT
85 LF 18" ADS N-12 S = 0.00 FT/FT
18" FLARED END SECTION ADS N-12 W/RIP RAP PAD INV OUT: 262.00
15' WIDE UTILITY
BIT. CONC. DRIVEWAY (TYP)
SINGLE FAMILY HOME FOOTPRINT (TYP)
TOF = 261.5 3 - BEDROOM SINGLE FAMILY HOME W/ TWO CAR GARAGE
TOF = 263.5 3 - BEDROOM SINGLE FAMILY HOME W/ TWO CAR GARAGE
TOF = 264.5 3 - BEDROOM SINGLE FAMILY HOME W/ TWO CAR GARAGE
TOF = 264.0 3 - BEDROOM SINGLE FAMILY HOME W/ TWO CAR GARAGE
TOF = 265.5 3 - BEDROOM SINGLE FAMILY HOME W/ TWO CAR GARAGE
TOF = 267.5 3 - BEDROOM SINGLE FAMILY HOME W/ TWO CAR GARAGE
TOF = 268.0 3 - BEDROOM SINGLE FAMILY HOME W/ TWO CAR GARAGE
TOF = 268.5 3 - BEDROOM SINGLE FAMILY HOME W/ TWO CAR GARAGE
TOF = 273.5 3 - BEDROOM SINGLE FAMILY HOME W/ TWO CAR GARAGE
TOF = 275.5 3 - BEDROOM SINGLE FAMILY HOME W/ TWO CAR GARAGE
TOF = 266.5 3 - BEDROOM SINGLE FAMILY HOME W/ TWO CAR GARAGE
TOF = 265.5 3 - BEDROOM SINGLE FAMILY HOME W/ TWO CAR GARAGE
TOF = 266.5 3 - BEDROOM SINGLE FAMILY HOME W/ TWO CAR GARAGE
TOF = 268

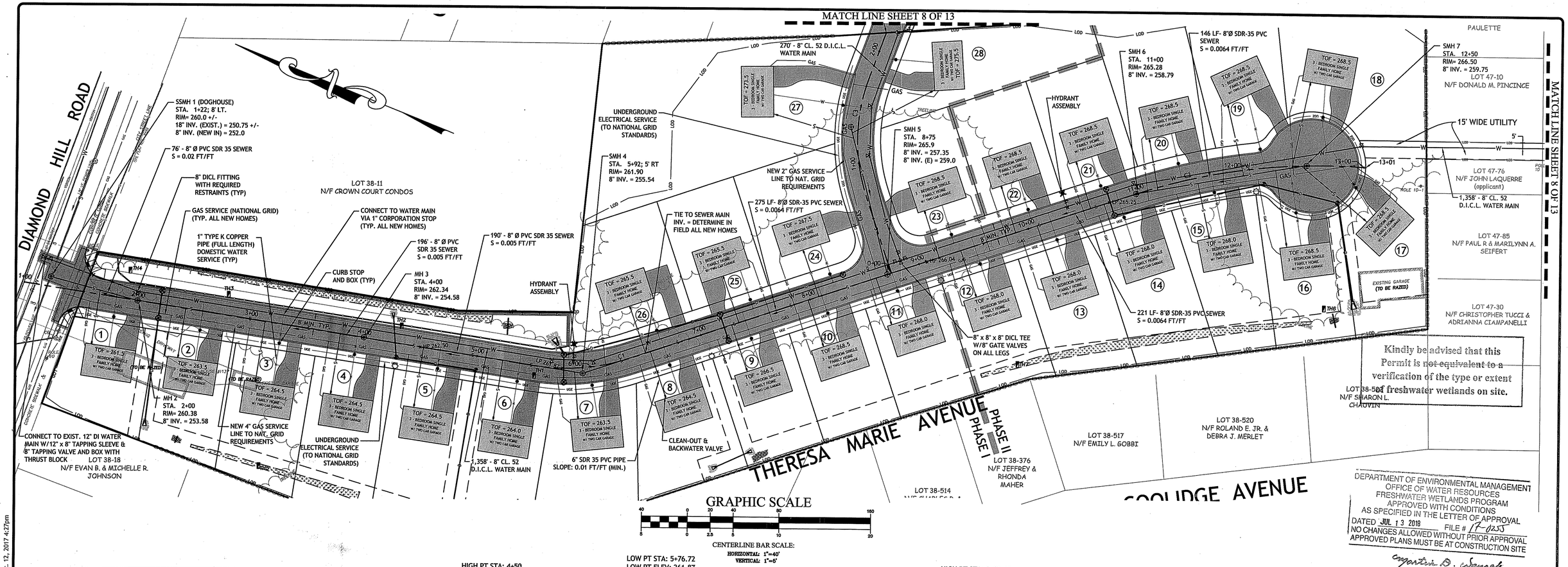

Kindly be advised that this Permit is not equivalent to a verification of the type or extent of freshwater wetlands on site.

DEPARTMENT OF ENVIRONMENTAL MANAGEMENT
OFFICE OF WATER RESOURCES
FRESHWATER WETLANDS PROGRAM
APPROVED WITH CONDITIONS
AS SPECIFIED IN THE LETTER OF APPROVAL
DATED JUL 13 2018 FILE # 17-0255
NO CHANGES ALLOWED WITHOUT PRIOR APPROVAL
APPROVED PLANS MUST BE AT CONSTRUCTION SITE

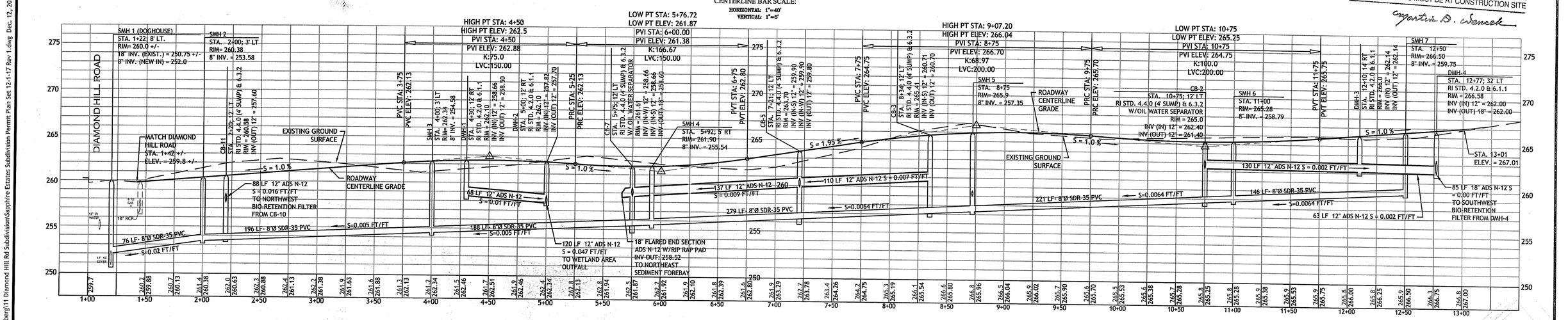

THERESA MARIE AVENUE PROFILE VIEW

REVISIONS:		
NO.	DATE.	DESCRIPTION
1.	8-23-17	City Engineering Review Comments of 8-3-17
2.	12-1-17	RIDOT Review Comments of 11-20-17
3.	12-12-17	RIDEM Review Comments of 11-30-17
DESIGNED BY:		DMD
DRAWN BY:		
CHECKED BY:		DMD
DATE:		7-1-17
PROJECT NO:		15-0001-11

SAPPHIRE ESTATES

MAJOR SUBDIVISION OF LAND PROJECT

MAP B6, LOTS 38-13 & 38-524
DIAMOND HILL ROAD AND WILCOX STREET
WOONSOCKET, RHODE ISLAND

DAVID M. D'AMICO
No. 6749
REGISTERED PROFESSIONAL ENGINEER CIVIL
12/12/17

DEtec.
D'AMICO ENGINEERING TECHNOLOGY, INC.
Civil · Transportation · Land Use
2080 Mineral Spring Ave., North Providence, RI 02911
(401) 622-1470 (401) 353-1190 fax www.dengineeringtec.com

PERMIT PLANS, NOT FOR CONSTRUCTION

PLAN AND PROFILE PLAN NO. 1

SHEET 8 OF 14

1-888-DIG-SAFE
PROTECT YOURSELF, GIVE 72 HOURS NOTICE

LOCATION OF EXISTING UTILITIES SHOWN, ARE FROM GATE LOCATION AND EXISTING DOCUMENTATION AND MAY NOT BE ACCURATE. EXACT LOCATION TO BE DONE BY THE APPROPRIATE UTILITY COMPANY OR MUNICIPALITY PRIOR TO ANY EXCAVATION CALL DIGSAFE AT 1-888-DIG-SAFE 1-888-344-7233

N:\D'Amico Engineering Technology, Inc\15-0001 Marc N Nyberg\11 Diamond Hill Rd Subdivision\Sapphire Estates Subdivision Permit Plan Set 12-1-17 Rev 1.dwg Dec. 12, 2017 4:27pm

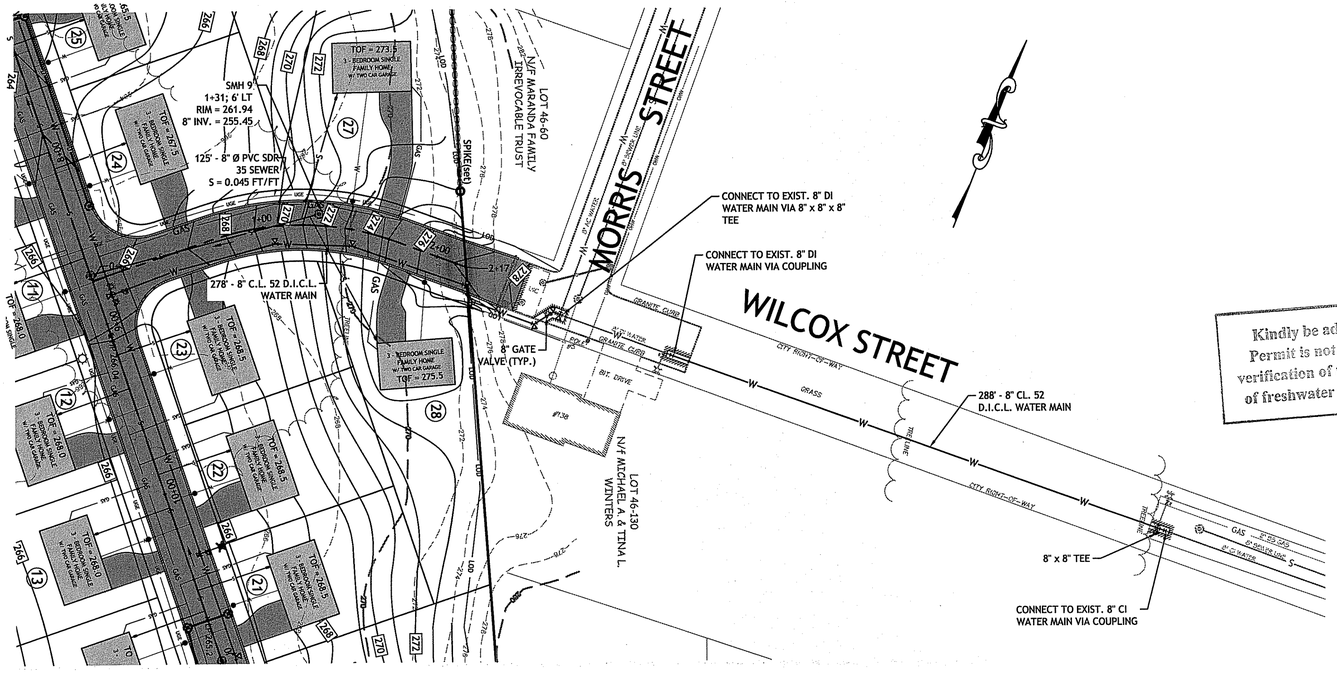

Kindly be advised that this Permit is not equivalent to a verification of the type or extent of freshwater wetlands on site.

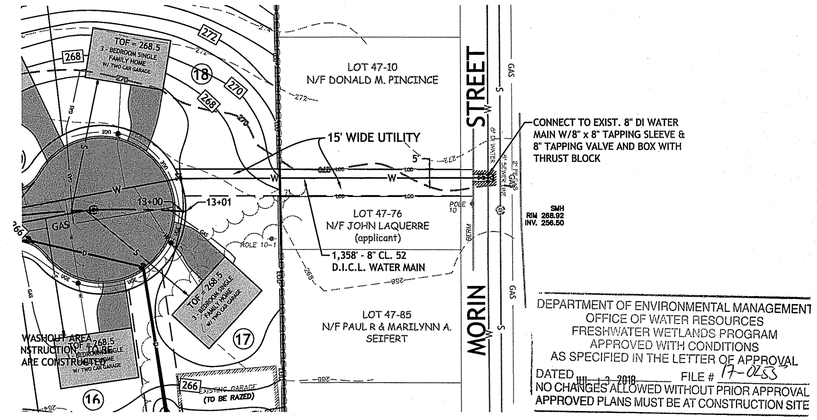

DEPARTMENT OF ENVIRONMENTAL MANAGEMENT
OFFICE OF WATER RESOURCES
FRESHWATER WETLANDS PROGRAM
APPROVED WITH CONDITIONS
AS SPECIFIED IN THE LETTER OF APPROVAL
DATED JUL - 3 2018 FILE # 17-033
NO CHANGES ALLOWED WITHOUT PRIOR APPROVAL
APPROVED PLANS MUST BE AT CONSTRUCTION SITE

MORIN STREET WATER MAIN TIE IN DETAIL

SCALE: 1" = 40'

GRAPHIC SCALE

CENTERLINE BAR SCALE:
HORIZONTAL: 1"=40'
VERTICAL: 1"=6'

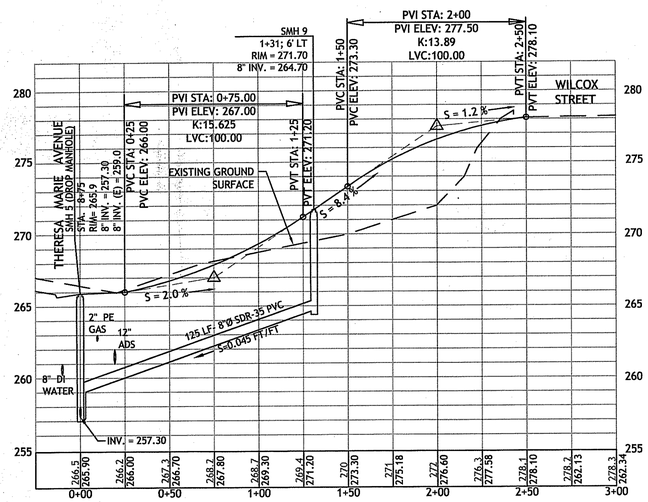

WILCOX STREET EXTENSION PROFILE VIEW

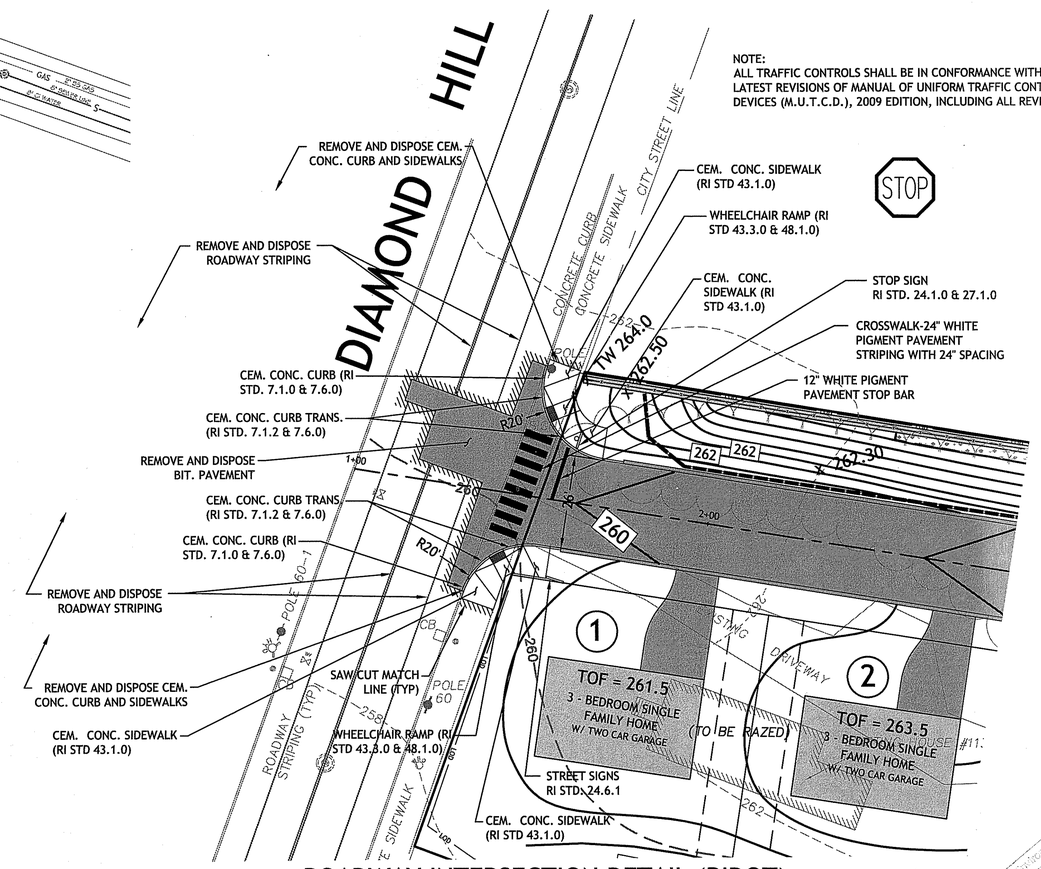

NOTE:
ALL TRAFFIC CONTROLS SHALL BE IN CONFORMANCE WITH THE LATEST REVISIONS OF MANUAL OF UNIFORM TRAFFIC CONTROL DEVICES (M.U.T.C.D.), 2009 EDITION, INCLUDING ALL REVISIONS.

ROADWAY INTERSECTION DETAIL (RIDOT)

SCALE: 1" = 40'

1-888-DIG-SAFE
PROTECT YOURSELF, GIVE 72 HOURS NOTICE

LOCATION OF EXISTING UTILITIES SHOWN, ARE FROM GATE LOCATION AND EXISTING DOCUMENTATION AND MAY NOT BE ACCURATE. EXACT LOCATION TO BE DONE BY THE APPROPRIATE UTILITY COMPANY OR MUNICIPALITY PRIOR TO ANY EXCAVATION CALL DIGSAFE AT 1-888-DIG-SAFE 1-888-344-7233

REVISIONS:

NO.	DATE.	DESCRIPTION
1.	8-23-17	City Engineering Review Comments of 8-3-17
2.	12-1-17	RIDOT Review Comments of 11-20-17
3.	12-12-17	RIDEM Review Comments of 11-30-17

DESIGNED BY: DMD
DRAWN BY:
CHECKED BY: DMD
DATE: 7-1-17
PROJECT NO: 15-0001-11

SAPPHIRE ESTATES

MAJOR SUBDIVISION OF LAND PROJECT

MAP B6, LOTS 38-13 & 38-524
DIAMOND HILL ROAD AND WILCOX STREET
WOONSOCKET, RHODE ISLAND

DAVID M. D'AMICO
No. 6749
REGISTERED PROFESSIONAL ENGINEER CIVIL
12/12/17

DEtec.
D'AMICO ENGINEERING TECHNOLOGY, INC.
Civil · Transportation · Land Use
2080 Mineral Spring Ave., North Providence, RI 02911
(401) 622-1470 (401) 353-1190 fax www.dengineeringtec.com

PERMIT PLANS, NOT FOR CONSTRUCTION

PLAN AND PROFILE PLAN NO. 2

SHEET 9 OF 14

N:\D'Amico Engineering Technology, Inc\15-0001 Marc N Nyberg\11 Diamond Hill Rd Subdivision\Sapphire Estates Subdivision Permit Plan Set 12-1-17 Rev 1.dwg Dec. 12, 2017 4:28pm

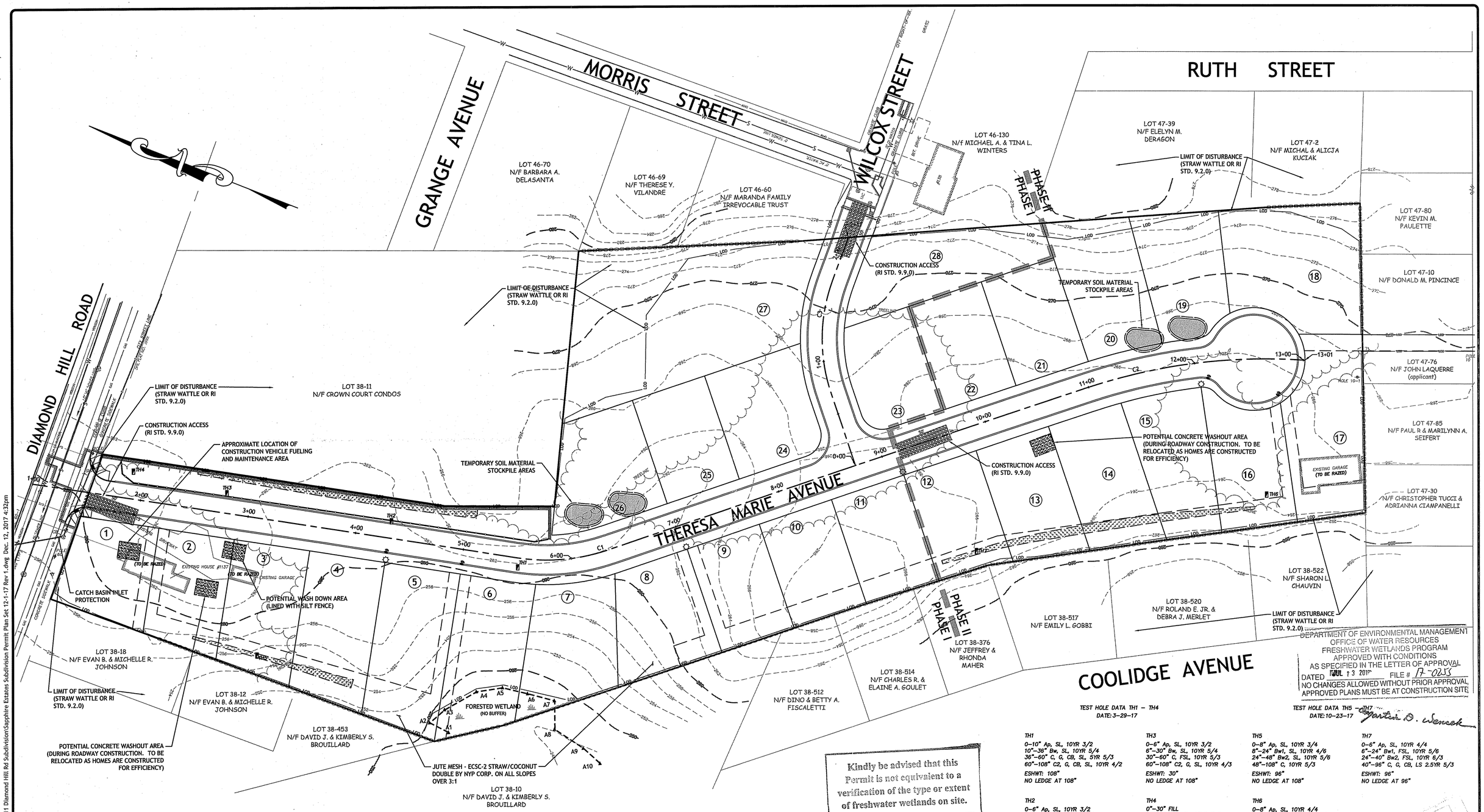

Kindly be advised that this Permit is not equivalent to a verification of the type or extent of freshwater wetlands on site.

DEPARTMENT OF ENVIRONMENTAL MANAGEMENT
OFFICE OF WATER RESOURCES
FRESHWATER WETLANDS PROGRAM
APPROVED WITH CONDITIONS
AS SPECIFIED IN THE LETTER OF APPROVAL
DATED JUL 13 2017 FILE # 17-0235
NO CHANGES ALLOWED WITHOUT PRIOR APPROVAL
APPROVED PLANS MUST BE AT CONSTRUCTION SITE

Martin D. Wencek

DEC 13 2017
Office of Water Resources

TEST HOLE DATA TH1 – TH4
DATE: 3–29–17

TH1
0–10" Ap, SL, 10YR 3/2
10"–36" Bw, SL, 10YR 5/4
36"–60" C, G, CB, SL, 5YR 5/3
60"–108" C2, G, CB, SL, 10YR 4/2
ESHWT: 108"
NO LEDGE AT 108"

TH2
0–6" Ap, SL, 10YR 3/2
6"–24" Bw, SL, 10YR 4/6
24"–32" C, G, CB, SL, 10YR 5/3
32"–108" C2, G, CB, SL, 10YR 4/3
ESHWT: 60"
NO LEDGE AT 108"

TH3
0–6" Ap, SL, 10YR 3/2
6"–30" Bw, SL, 10YR 5/4
30"–60" C, FSL, 10YR 5/3
60"–108" C2, G, SL, 10YR 4/3
ESHWT: 30"
NO LEDGE AT 108"

TH4
0"–30" FILL
30"–36" Ap, SL, 10YR 3/2
36"–48" C, FSL, 10YR 5/3
48"–108" C2, G, SL, 10YR 4/3
ESHWT: 10"
NO LEDGE AT 108"

TEST HOLE DATA TH5 – TH7
DATE: 10–23–17

TH5
0–8" Ap, SL, 10YR 3/4
8"–24" Bw1, SL, 10YR 4/6
24"–48" Bw2, SL, 10YR 5/8
48"–108" C, 10YR 5/3
ESHWT: 96"
NO LEDGE AT 108"

TH6
0–8" Ap, SL, 10YR 4/4
8"–14" Bw1, FSL, 10YR 5/6
14"–26" Bw2, FSL, 2.5YR 6/3
26"–96" C, G, CB, LS, 2.5YR 5/3
ESHWT: 96"
NO LEDGE AT 96"

TH7
0–6" Ap, SL, 10YR 4/4
6"–24" Bw1, FSL, 10YR 5/6
24"–40" Bw2, FSL, 10YR 6/3
40"–96" C, G, CB, LS 2.5YR 5/3
ESHWT: 96"
NO LEDGE AT 96"

SCALE (FEET)
0 20 40 80 160
1 INCH = 40 FT

1-888-DIG-SAFE
PROTECT YOURSELF, GIVE 72 HOURS NOTICE

LOCATION OF EXISTING UTILITIES SHOWN, ARE FROM GATE LOCATION AND EXISTING DOCUMENTATION AND MAY NOT BE ACCURATE. EXACT LOCATION TO BE DONE BY THE APPROPRIATE UTILITY COMPANY OR MUNICIPALITY PRIOR TO ANY EXCAVATION CALL DIGSAFE AT 1-888-DIG-SAFE 1-888-344-7233

REVISIONS:

NO.	DATE.	DESCRIPTION
1.	8-23-17	City Engineering Review Comments of 8-3-17
2.	12-1-17	RIDOT Review Comments of 11-20-17
3.	12-12-17	RIDEM Review Comments of 11-30-17

DESIGNED BY: DMD
DRAWN BY:
CHECKED BY: DMD
DATE: 7-1-17
PROJECT NO: 15-0001-11

SAPPHIRE ESTATES
MAJOR SUBDIVISION OF LAND PROJECT
MAP B6, LOTS 38-13 & 38-524
DIAMOND HILL ROAD AND WILCOX STREET
WOONSOCKET, RHODE ISLAND

DAVID M. D'AMICO
No. 6749
REGISTERED PROFESSIONAL ENGINEER
CIVIL
12/12/17

DEtec.
D'AMICO ENGINEERING TECHNOLOGY, INC.
Civil · Transportation · Land Use
2080 Mineral Spring Ave., North Providence, RI 02911
(401) 622-1470 (401) 353-1190 fax www.dengineeringtec.com

PERMIT PLANS, NOT FOR CONSTRUCTION

SOIL EROSION AND SEDIMENT CONTROL PLAN

SHEET 10 OF 14

N:\D'amico Engineering Technology, Inc\15-0001 Marc N Nyberg\11 Diamond Hill Rd Subdivision\Sapphire Estates Subdivision Permit Plan Set 12-1-17 Rev 1.dwg Dec. 12, 2017 4:32pm

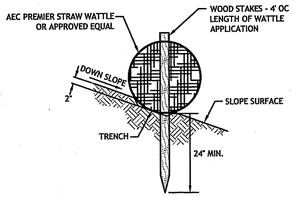

STRAW WATTLE STAKE DETAIL ON SOIL

N.T.S.

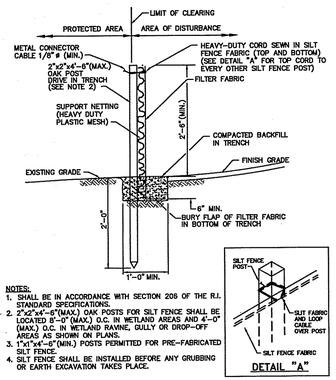

NOTES:
1. SHALL BE IN ACCORDANCE WITH SECTION 208 OF THE R.I. STANDARD SPECIFICATIONS.
2. 2"x2"x4'-0"(MAX.) OAK POSTS FOR SILT FENCE SHALL BE LOCATED 8'-0" (MAX.) O.C. IN WETLAND AREAS AND 4'-0" (MAX.) O.C. IN WETLAND RAVINE, GULLY OR DROP-OFF AREAS AS SHOWN ON PLANS.
3. 1"x1"x4'-6" (MIN.) POSTS PERMITTED FOR PRE-FABRICATED SILT FENCE.
4. SILT FENCE SHALL BE INSTALLED BEFORE ANY GRUBBING OR EARTH EXCAVATION TAKES PLACE.

694 SILT FENCE DETAIL — R.I. STANDARD 9.2.0

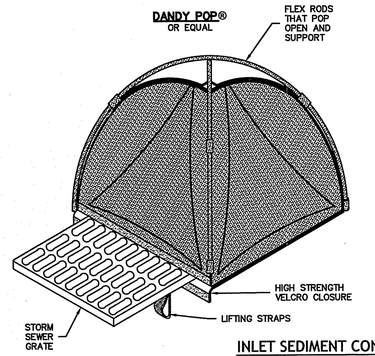

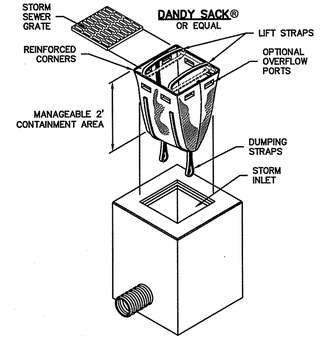

INLET SEDIMENT CONTROL DEVICES

NOT TO SCALE

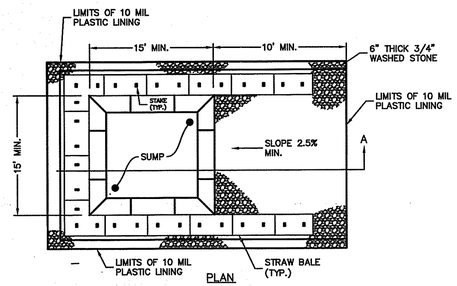

PLAN

WASHOUT SIGN

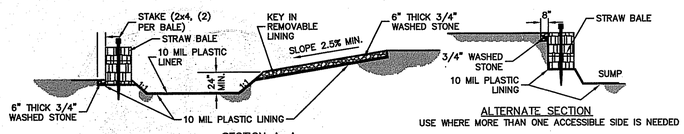

SECTION A–A

ALTERNATE SECTION
USE WHERE MORE THAN ONE ACCESSIBLE SIDE IS NEEDED

NOTES:

1. PIT IS SPECIFICALLY DESIGNATED, DIKED AND CONTAINED TO PREVENT CONTACT BETWEEN CONCRETE WASH AND STORMWATER.
2. WASH WATER SHALL NOT BE ALLOWED TO FLOW TO SURFACE WATER.
3. FACILITY MUST HOLD SUFFICIENT VOLUME TO CONTAIN CONCRETE WASTE WITH A MINIMUM FREEBOARD OF 12."
4. FACILITY SHALL NOT BE FILLED BEYOND 12" OF FREEBOARD UNLESS A NEW FACILITY IS CONSTRUCTED. WASHOUT AREA SHALL BE EMPTIED AT THIS TIME AND DISPOSED OF IN ACCORDANCE WITH ALL REGULATIONS.
5. SAW CUT PORTLAND CEMENT CONCRETE, RESIDUE FROM SAWCUT & GRINDING TO BE DISPOSED OF IN THE PIT.
6. CONCRETE WASHOUTS SHALL BE LOCATED A MINIMUM OF 100' FROM DRAINAGE WAYS, INLETS, & SURFACE WATERS.
7. MANUFACTURED CONCRETE WASHOUT DEVICES MAY BE USED IF REMOVED FROM THE SITE WHEN AT 95% FULL CAPACITY.

CONCRETE WASHOUT AREA

(NOT TO SCALE)

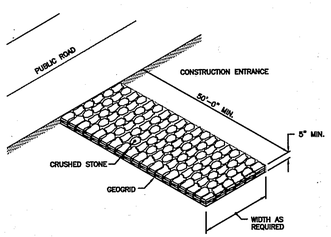

NOTE:
SHALL BE IN ACCORDANCE WITH SECTION 211 OF THE R.I. STANDARD SPECIFICATIONS.

CONSTRUCTION ACCESS — R.I. STANDARD 9.9.0

N.T.S.

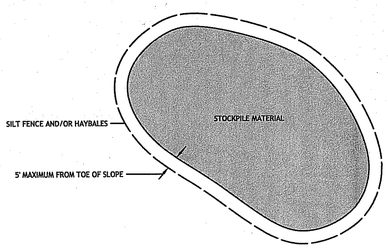

STOCKPILE DETAIL

N.T.S.

SOIL EROSION AND SEDIMENTATION CONTROL NOTES

1. THE HAYBALE, WATTLE AND SILT FENCE LINE ILLUSTRATED ON THESE PLANS SHALL SERVE AS THE STRICT LIMIT OF DISTURBANCE FOR THE PROJECT WITHIN OR ADJACENT TO REGULATED FRESHWATER WETLAND AREAS.
2. THE LIMITS OF CLEARING, GRADING, AND DISTURBANCE SHALL BE KEPT TO A MINIMUM WITHIN THE PROPOSED AREA OF CONSTRUCTION. ALL AREAS OUTSIDE OF THESE LIMITS, AS DEPICTED ON THE PLAN SHALL BE TOTALLY UNDISTURBED, TO REMAIN IN NATURAL CONDITION.
3. ALL CATCH BASINS AND CULVERTS SHALL BE PROTECTED WITH STAKED HAYBALES (R.I. STD. 9.8.0) DURING CONSTRUCTION ACTIVITIES. ALL PROPOSED STORM WATER DISCHARGE AREAS SHALL BE LINED WITH A RIPRAP SPLASH PAD AND PROTECTED WITH STAKED HAYBALE OUTLET PROTECTION (R.I. STD. 9.1.0), OR STAKED HAYBALE WITH SILT FENCE (R.I. STD. 9.3.0) SHALL ALSO BE INSTALLED AT ALL EXISTING STORMWATER DISCHARGE LOCATIONS WHERE DISTRIBUTING PIPES, CATCH BASINS, AND MANHOLES ARE TO BE CLEANED AND FLUSHED.
4. ALL DISTURBED SLOPES EITHER NEWLY CREATED OR CURRENTLY EXPOSED SHALL BE SEEDED, PROTECTED AND MAINTAINED BY THE CONTRACTOR. THE CONTRACTOR SHALL REGULARLY CHECK ALL SEEDED AREAS TO ENSURE THAT A GOOD STAND IS MAINTAINED.
5. ALL HAYBALES, TEMPORARY TREATMENT (HAY, STRAW, ETC.) AND TEMPORARY EROSION PROTECTION SHALL BE MAINTAINED BY THE CONTRACTOR THROUGHOUT CONSTRUCTION AND SHALL REMAIN IN PLACE UNTIL AN ACCEPTABLE STAND OF GRASS OR APPROVED GROUND COVER IS ESTABLISHED.
6. STOCKPILES OF TOPSOIL SHALL NOT BE LOCATED NEAR WATERWAYS. THEY SHALL HAVE SIDE SLOPES OF NO GREATER THAN 2:1 AND SHALL BE TEMPORARILY SEEDED AND/OR STABILIZED PER CONTRACT SPECIFICATIONS.
7. THE HAYBALES SHALL BE CHECKED BY THE CONTRACTOR ON A WEEKLY BASIS AND AFTER EACH STORM FOR UNDERMINING OR DETERIORATION. THE CONTRACTOR SHALL REPAIR OR REPLACE ANY HAYBALES AS NEEDED. THE CONTRACTOR SHALL CLEAN THE ACCUMULATED SEDIMENT IF HALF OF THE ORIGINAL HEIGHT OF THE HAY-BALES BECOMES FILLED WITH SEDIMENTS.
8. IT SHALL BE THE RESPONSIBILITY OF THE CONTRACTOR TO MAINTAIN ALL SOIL EROSION AND SEDIMENT CONTROLS ON THE PROJECT SITE FOR THE ENTIRE DURATION OF THE CONSTRUCTION PERIOD. THE CONTRACTOR SHALL FOLLOW THE DIRECTION OF THE ENGINEER OR OWNER'S REPRESENTATIVE WITH REGARD TO INSTALLATION, MAINTENANCE, AND REPAIR OF ALL SOIL EROSION AND SEDIMENTATION CONTROLS ON THE PROJECT SITE. TEMPORARY SOIL EROSION AND SEDIMENTATION CONTROLS (HAYBALES, SILT FENCE, ETC.) SHALL BE MAINTAINED UNTIL ALL EXPOSED SOILS ARE SATISFACTORILY STABILIZED. THE CONTRACTOR SHALL BE RESPONSIBLE FOR REPAIRING AND/OR RESEEDING ALL AREAS THAT DO NOT DEVELOP WITHIN ONE YEAR FROM THE COMPLETION OF CONSTRUCTION.
9. ALL REFERENCED SOIL EROSION AND SEDIMENTATION CONTROLS INCLUDING MATERIALS USED, APPLICATION RATES AND THE INSTALLATION PROCEDURES SHALL BE PERFORMED PER THE "RHODE ISLAND EROSION AND SEDIMENTATION HANDBOOK", DATED 1989, REVISED 2014.

Kindly be advised that this Permit is not equivalent to a verification of the type or extent of freshwater wetlands on site.

BMP MAINTENANCE SCHEDULE

1. ALL MAINTENANCE (INCLUDING CLEANING) REQUIRED DURING THE CONSTRUCTION PHASE OF THE PROJECT SHALL BE THE RESPONSIBILITY OF THE CONTRACTOR.
2. CONSTRUCTION EQUIPMENT AND TRAFFIC SHALL BE RESTRICTED FROM TRAVELING OVER THE INFILTRATION TRENCH AND/OR SUBSURFACE CHAMBER AREAS TO MINIMIZE COMPACTION OF THE SOIL.
3. MEASURES NEEDED TO ENSURE THE PROPER OPERATION OF THE STORMWATER DRAINAGE SYSTEMS AND WATER QUALITY CONTROL SYSTEMS TO INCLUDE INSPECTION, CLEANING AND REPAIRS TO ALL PIPES, INTAKE AND DISCHARGE STRUCTURES (INCLUDING RIP-RAP SPLASH PADS), CATCH BASIN SUMPS, AND MANHOLES.
4. INSPECTION OF ALL SLOPES, BERMS, AND OTHER CONTROL STRUCTURES (INCLUDING ROADWAY SIDE SLOPES, FOR STRUCTURAL INTEGRITY, STABILITY AND EVIDENCE OF SOIL EROSION, SHALL INCLUDE MAINTENANCE OF THESE STRUCTURES IF NECESSARY. INSPECTIONS SHALL BE PERFORMED FOLLOWING ALL RAIN EVENTS OF ½ INCH RAINFALL OR MORE IN A 24-HOUR PERIOD, OR BIMONTHLY IF NO RAINFALL EVENT OCCURS.
5. UPON COMPLETION OF PROJECT CONSTRUCTION, AND PRIOR TO VACATING THE SITE, THE CONTRACTOR SHALL CONDUCT A FINAL INSPECTION, REPAIR ANY VEGETATIVE SOIL EROSION AND SEDIMENTATION CONTROL MEASURES, (SEEDING, PLANTING, ETC.) WHERE REQUIRED, AND REPAIR (OR REMOVE WHERE APPROPRIATE) ANY TEMPORARY SOIL EROSION AND SEDIMENTATION CONTROL DEVICES. AFTER PERMANENT SOIL STABILIZATION ON THE ENTIRE SITE HAS OCCURRED, ALL TEMPORARY CONTROL MEASURES MUST BE REMOVED.
6. AFTER THE COMPLETION OF PROJECT CONSTRUCTION AND THE FINAL STABILIZATION OF THE ENTIRE SITE, THE INSPECTION AND MAINTENANCE OF ALL STORMWATER FACILITIES MUST BE PERFORMED.
7. REPLANTING, REGRADING, OR OTHER REPAIRS NEEDED AS A RESULT OF SOIL EROSION AND SEDIMENTATION PROCESSES SHALL BE DONE PROMPTLY TO ENSURE PROPER FUNCTIONING OF THE ENTIRE SYSTEM.
8. ANY TRASH, DEBRIS, ETC. SHOULD BE REMOVED FROM ANY WETLAND AREAS, SWALE, AND PIPE OUTLETS.
9. ALL DISTURBED AREAS WILL BE LOAMED AND SEEDED UNLESS DIRECTED OTHERWISE.

DEPARTMENT OF ENVIRONMENTAL MANAGEMENT
OFFICE OF WATER RESOURCES
FRESHWATER WETLANDS PROGRAM
APPROVED WITH CONDITIONS
AS SPECIFIED IN THE LETTER OF APPROVAL
DATED JUL 13 2018 FILE # 17-0255
NO CHANGES ALLOWED WITHOUT PRIOR APPROVAL
APPROVED PLANS MUST BE AT CONSTRUCTION SITE
Gregory D. Venecek

REVISIONS:

NO.	DATE.	DESCRIPTION
1.	8-23-17	City Engineering Review Comments of 8-3-17
2.	12-1-17	RIDOT Review Comments of 11-20-17
3.	12-12-17	RIDEM Review Comments of 11-30-17

DESIGNED BY:	DMD
DRAWN BY:	
CHECKED BY:	DMD
DATE:	7-1-17
PROJECT NO:	15-0001-11

SAPPHIRE ESTATES

MAJOR SUBDIVISION OF LAND PROJECT

MAP B6, LOTS 38-13 & 38-524
DIAMOND HILL ROAD AND WILCOX STREET
WOONSOCKET, RHODE ISLAND

DAVID M. D'AMICO
No. 6749
REGISTERED PROFESSIONAL ENGINEER CIVIL
12/12/17

DEtec.
D'AMICO ENGINEERING TECHNOLOGY, INC.
Civil · Transportation · Land Use
2080 Mineral Spring Ave., North Providence, RI 02911
(401) 622-1470 (401) 353-1190 fax www.dengineeringtec.com

PERMIT PLANS, NOT FOR CONSTRUCTION

SOIL EROSION AND SEDIMENT CONTROL PLAN

SHEET 11 OF 14

N:\D'Amico Engineering Technology, Inc\15-0001 Marc N Nyberg\11 Diamond Hill Rd Subdivision\Sapphire Estates Subdivision Permit Plan Set 12-1-17 Rev 1.dwg Dec. 12, 2017 4:33pm

NOTE:
1. MINIMUM COMPACTION FOR GRAVEL BORROW SUBBASE OR SUBGRADE TO BE 95% MODIFIED PROCTOR.
2. NO WORK SHOULD BE DONE OUTSIDE OF THE PROJECT SITE. PAVEMENT SHOULD MATCH WHERE NOTED ON THE SITE PLANS.
3. WHEN MATCHING EXISTING PAVEMENT THE LONGITUDINAL CUT AND MATCH SECTION SHOULD NOT EXCEED PAST THE SHOULDER STRIPING.

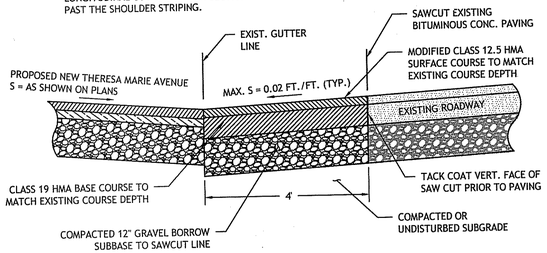

NEW SIDE STREET SAWCUT & MATCH DETAIL

NOT TO SCALE

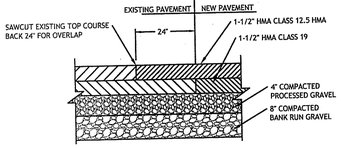

NOTE:
PROVIDE BITUMINOUS TACK COAT AT ALL SAWCUTS.

PAVEMENT CUT & MATCH AT WILCOX STREET

NOT TO SCALE

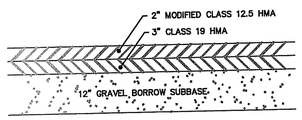

PAVEMENT CROSS SECTION (RIDOT ROW)

NOT TO SCALE

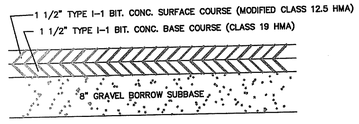

PAVEMENT CROSS SECTION - DRIVEWAYS

NOT TO SCALE

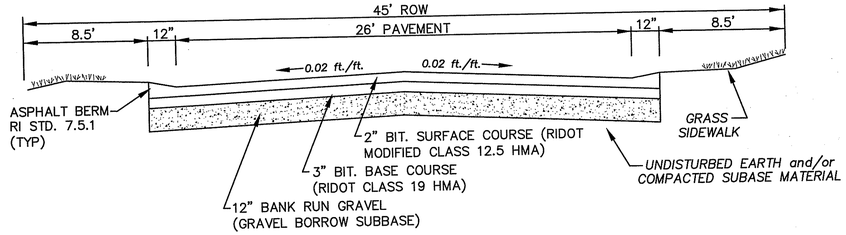

ROADWAY CROSS-SECTION

NOT TO SCALE

Kindly be advised that this Permit is not equivalent to a verification of the type or extent of freshwater wetlands on site.

DEPARTMENT OF ENVIRONMENTAL MANAGEMENT
OFFICE OF WATER RESOURCES
FRESHWATER WETLANDS PROGRAM
APPROVED WITH CONDITIONS
AS SPECIFIED IN THE LETTER OF APPROVAL
DATED JUL 13 2018 FILE # 17-0255
NO CHANGES ALLOWED WITHOUT PRIOR APPROVAL
APPROVED PLANS MUST BE AT CONSTRUCTION SITE

Jennifer D. Wenek

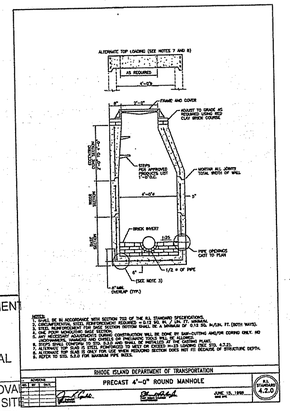

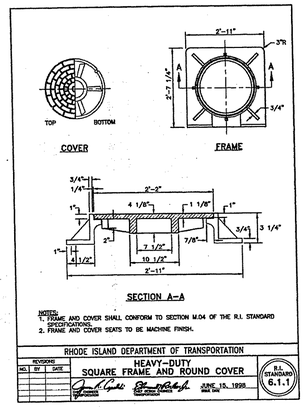

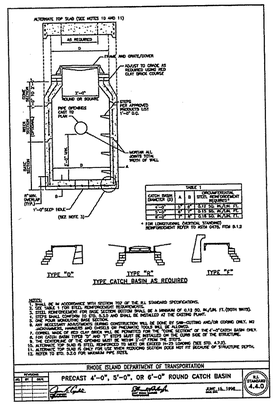

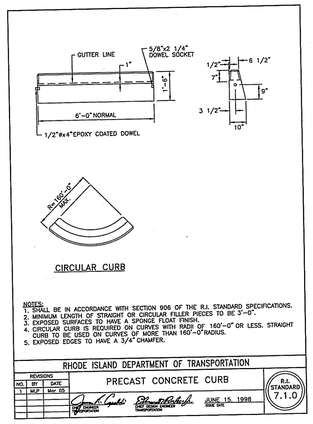

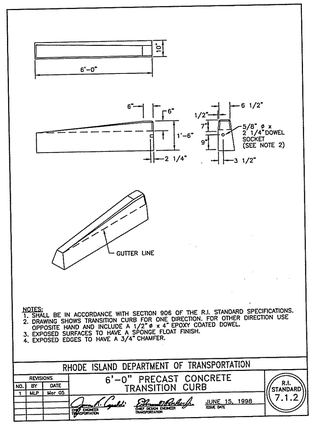

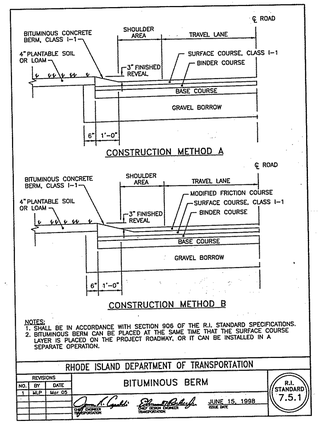

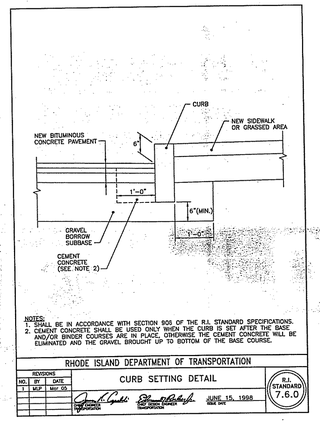

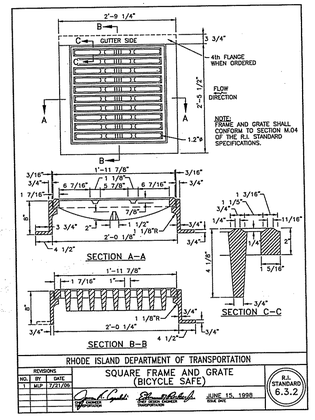

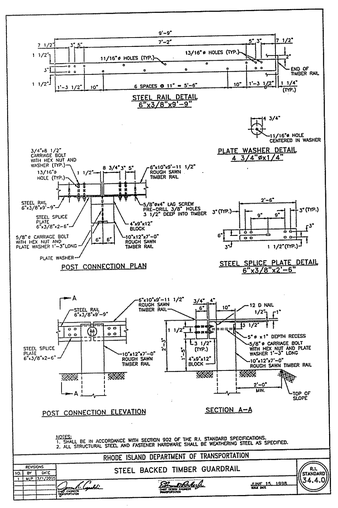

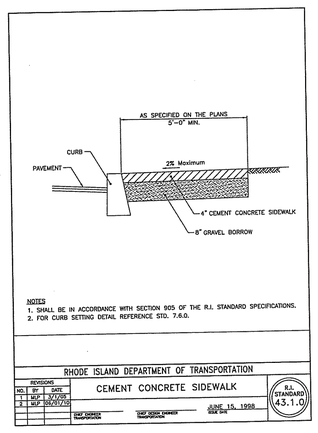

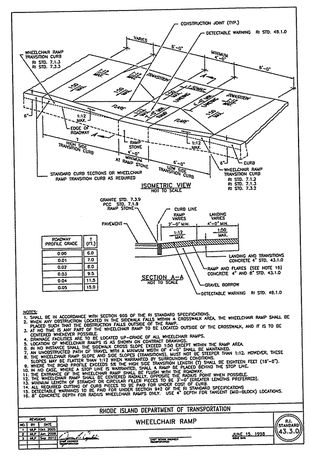

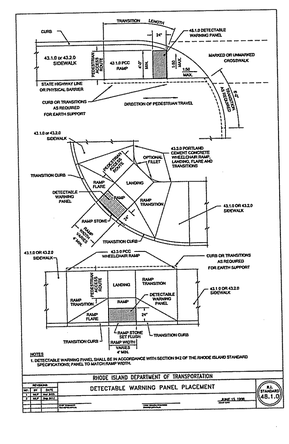

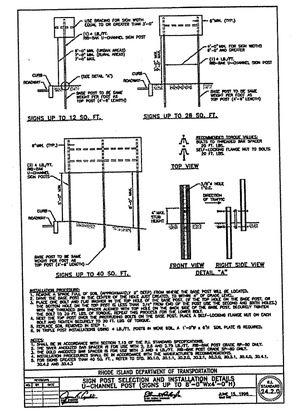

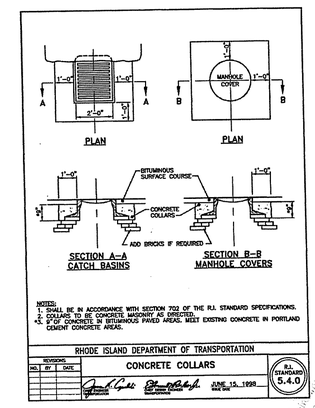

REVISIONS:		
NO.	DATE.	DESCRIPTION
1.	8-23-17	City Engineering Review Comments of 8-3-17
2.	12-1-17	RIDOT Review Comments of 11-20-17
3.	12-12-17	RIDEM Review Comments of 11-30-17

DESIGNED BY: DMD
DRAWN BY:
CHECKED BY: DMD
DATE: 7-1-17
PROJECT NO: 15-0001-11

SAPPHIRE ESTATES
MAJOR SUBDIVISION OF LAND PROJECT
MAP B6, LOTS 38-13 & 38-524
DIAMOND HILL ROAD AND WILCOX STREET
WOONSOCKET, RHODE ISLAND

DAVID M. D'AMICO
No. 6749
REGISTERED PROFESSIONAL ENGINEER CIVIL
12/12/17

DEtec.
D'AMICO ENGINEERING TECHNOLOGY, INC.
Civil · Transportation · Land Use
2080 Mineral Spring Ave., North Providence, RI 02911
(401) 622-1470 (401) 353-1190 fax www.dengineeringtec.com

PERMIT PLANS, NOT FOR CONSTRUCTION

SITE DETAILS NO. 1

SHEET 12 OF 14

DEC 13

H:\D'Amico Engineering Technology, Inc\15-0001 Marc N Nyberg\11 Diamond Hill Rd Subdivision\Sapphire Estates Subdivision Permit Plan Set 12-1-17 Rev 1.dwg Dec. 12, 2017 1:01pm

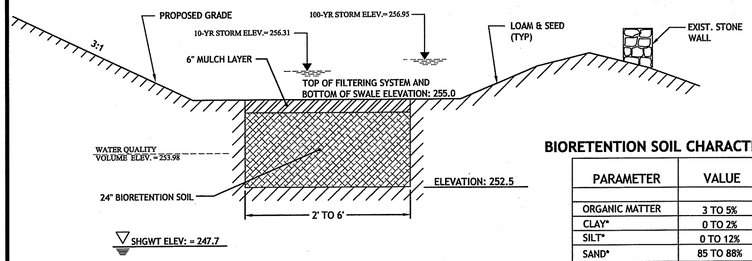

NORTHWEST BIORETENTION FILTER DETAIL SECTION

NOT TO SCALE

BIORETENTION SOIL CHARACTERISTICS

PARAMETER	VALUE
ORGANIC MATTER	3 TO 5%
CLAY*	0 TO 2%
SILT*	0 TO 12%
SAND*	85 TO 88%

* SOIL CHARACTERISTICS. AUGMENT SOILS WITH AGED LEAF COMPOST AND ACCEPTABLE TOPSOIL.

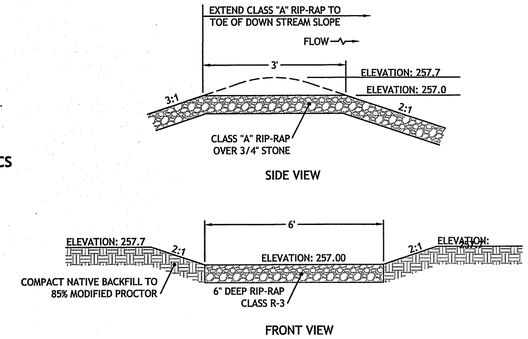

NORTHWEST EMERGENCY SPILLWAY

NOT TO SCALE

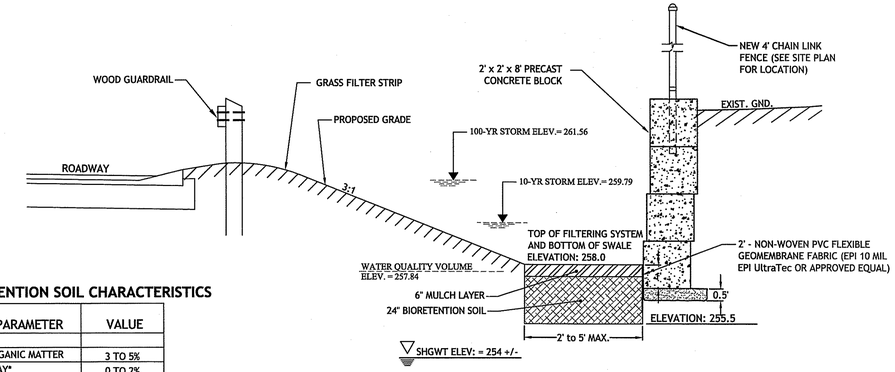

BIORETENTION SOIL CHARACTERISTICS

PARAMETER	VALUE
ORGANIC MATTER	3 TO 5%
CLAY*	0 TO 2%
SILT*	0 TO 12%
SAND*	85 TO 88%

* SOIL CHARACTERISTICS. AUGMENT SOILS WITH AGED LEAF COMPOST AND ACCEPTABLE TOPSOIL.

NORTHEAST BIORETENTION FILTER DETAIL SECTION

SCALE: 1" = 3'

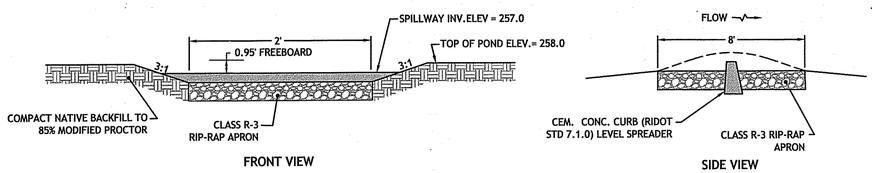

NORTHWEST SEDIMENT FOREBAY WEIR SPILLWAY

NOT TO SCALE

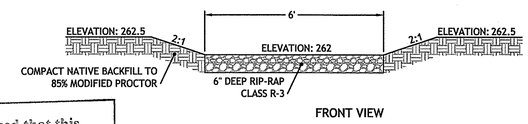

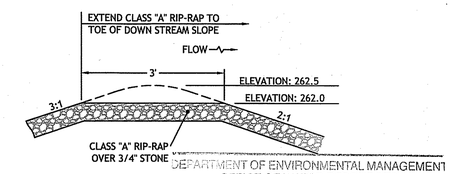

NORTHEAST EMERGENCY SPILLWAY

NOT TO SCALE

Kindly be advised that this Permit is not equivalent to a verification of the type or extent of freshwater wetlands on site.

DEPARTMENT OF ENVIRONMENTAL MANAGEMENT
OFFICE OF WATER RESOURCES
FRESHWATER WETLANDS PROGRAM
APPROVED WITH CONDITIONS
AS SPECIFIED IN THE LETTER OF APPROVAL
DATE JUL 13 2018 FILE # A-0233
NO CHANGES ALLOWED WITHOUT PRIOR APPROVAL
APPROVED PLANS MUST BE AT CONSTRUCTION SITE

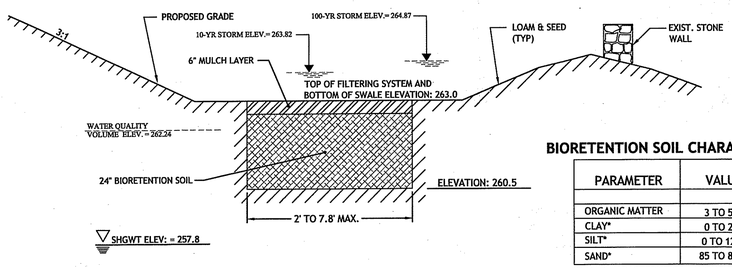

SOUTHWEST BIORETENTION FILTER DETAIL SECTION

NOT TO SCALE

BIORETENTION SOIL CHARACTERISTICS

PARAMETER	VALUE
ORGANIC MATTER	3 TO 5%
CLAY*	0 TO 2%
SILT*	0 TO 12%
SAND*	85 TO 88%

* SOIL CHARACTERISTICS. AUGMENT SOILS WITH AGED LEAF COMPOST AND ACCEPTABLE TOPSOIL.

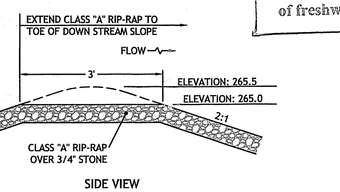

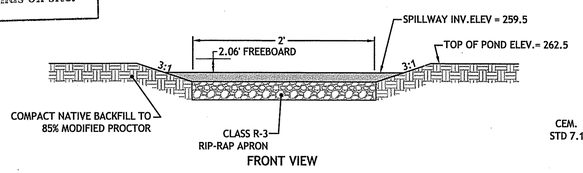

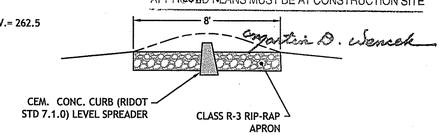

NORTHEAST SEDIMENT FOREBAY WEIR SPILLWAY

NOT TO SCALE

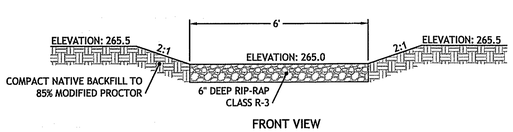

SOUTHWEST EMERGENCY SPILLWAY

NOT TO SCALE

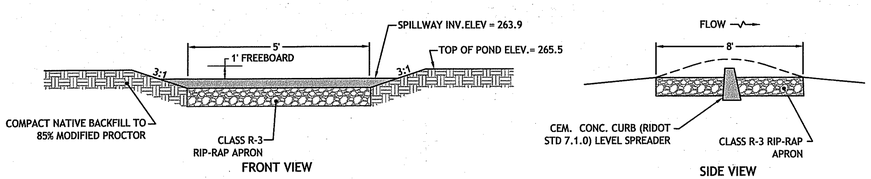

SOUTHWEST SEDIMENT FOREBAY WEIR SPILLWAY

NOT TO SCALE

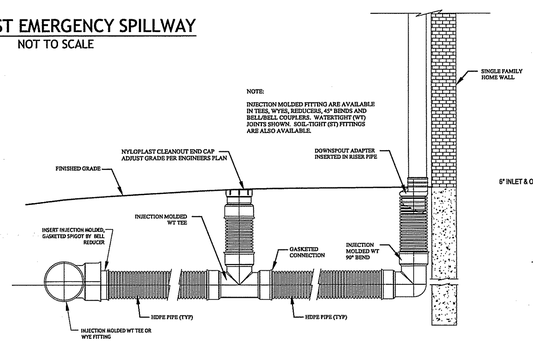

ROOFDRAIN W/CLEAN OUT DETAIL

N.T.S.

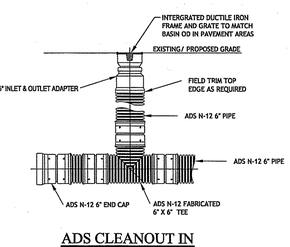

ADS CLEANOUT IN PAVEMENT AREAS

N.T.S.

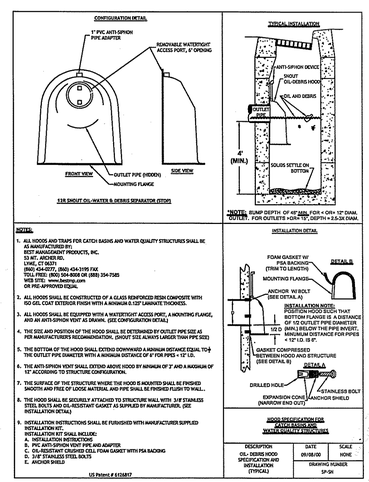

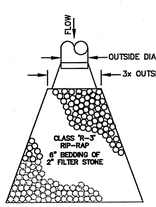

*INSTALL APRONS AS SHOWN ON PLAN

RIP-RAP	FILTER STONE NSA NO	RIP-RAP	MIN.	AVG.	MAX.
R-2	FS-1	R-2	1"	1.5"	3"
R-3	FS-2	R-3	2"	3"	6"
R-4	FS-2	R-4	3"	6"	12"

Location	L	W	SIZE
SITE RIP RAP APRONS	6'	4'	R-3

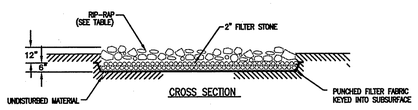

RIP-RAP APRON DETAIL

N.T.S.

REVISIONS:		
NO.	DATE.	DESCRIPTION
1.	8-23-17	City Engineering Review Comments of 8-3-17
2.	12-1-17	RIDOT Review Comments of 11-20-17
3.	12-12-17	RIDEM Review Comments of 11-30-17

DESIGNED BY: DMD
DRAWN BY:
CHECKED BY: DMD
DATE: 7-1-17
PROJECT NO: 15-0001-11

SAPPHIRE ESTATES

MAJOR SUBDIVISION OF LAND PROJECT

MAP B6, LOTS 38-13 & 38-524
DIAMOND HILL ROAD AND WILCOX STREET
WOONSOCKET, RHODE ISLAND

DAVID M. D'AMICO
No. 6749
REGISTERED PROFESSIONAL ENGINEER CIVIL
12/12/17

DEtec.
D'AMICO ENGINEERING TECHNOLOGY, INC.
Civil · Transportation · Land Use
2080 Mineral Spring Ave., North Providence, RI 02911
(401) 622-1470 (401) 353-1190 fax www.dengineeringtec.com

PERMIT PLANS, NOT FOR CONSTRUCTION

SITE DETAILS NO. 2

SHEET 13 OF 14

DEC 13 2017

N:\D'Amico Engineering Technology, Inc\15-0001 Marc N Nyberg\11 Diamond Hill Rd Subdivision\Sapphire Estates Subdivision Permit Plan Set 12-1-17 Rev 1.dwg Dec. 12, 2017 4:34pm

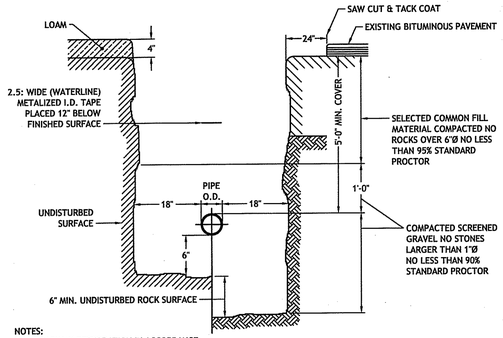

NOTES:
1. ROADWAY RESTORATION IN ACCORDANCE WITH COMMUNITY OR RIDOT.
2. SEE CITY OF WOONSOCKET STANDARD DETAILS FOR FURTHER REFERENCE.

WATER TRENCH INSTALLATION IN ROCK AND SOIL

NOT TO SCALE

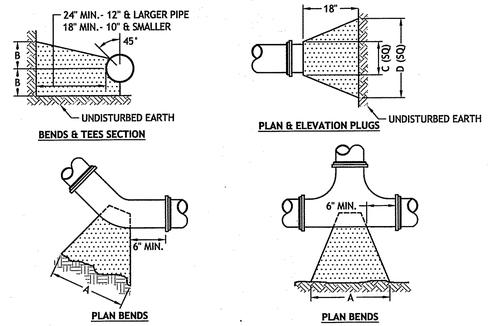

NOTE
1. ALL CONCRETE SHALL BE 400 P.S.I. @ 28 DAYS.
2. CONCRETE THRUST BLOCKS SHALL BEAR AGAINST UNDISTURBED EARTH.
3. FORMS TO BE USED AS NECESSARY.
4. ALL BOLTS AND NUTS TO BE PROTECTED FROM CONCRETE AND EASILY ACCESSIBLE WHEN THRUST BLOCK INSTALLED.
5. REGISTERED PROFESSIONAL ENGINEER IN THE STATE OF R.I. SHALL VERIFY ALL CALCULATIONS DURING DESIGN TO MEET CONDITIONS OF PROJECT AND CITY REQUIREMENTS.

SIZE	TEES		PLUGS		90° BEND		45° BEND		22 1/2" BEND		11 1/4" BEND	
	A	B	C	D	A	B	A	B	A	B	A	B
4"	22"	12"	22"	12"	24"	16"	20"	10"	14"	7"	11"	5"
6"	30"	18"	30"	18"	35"	22"	27"	15"	19"	12"	13"	8"
8"	38"	24"	38"	24"	46"	29"	33"	22"	25"	14"	19"	10"

THRUST BLOCK

NOT TO SCALE

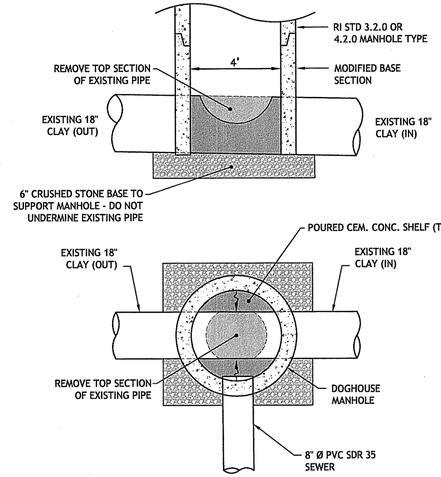

DOG HOUSE MANHOLE (DIAMOND HILL RD)
BASE SECTION DETAIL
NOT TO SCALE

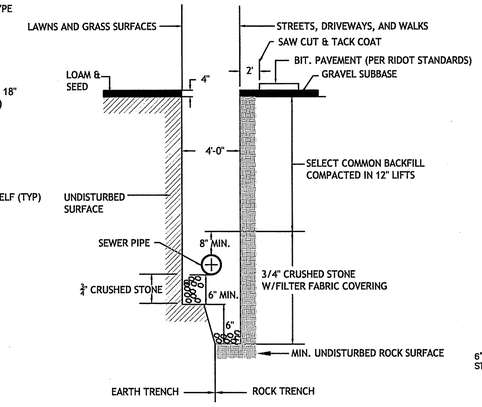

TYPICAL SEWER LINE TRENCH DETAIL

NO SCALE

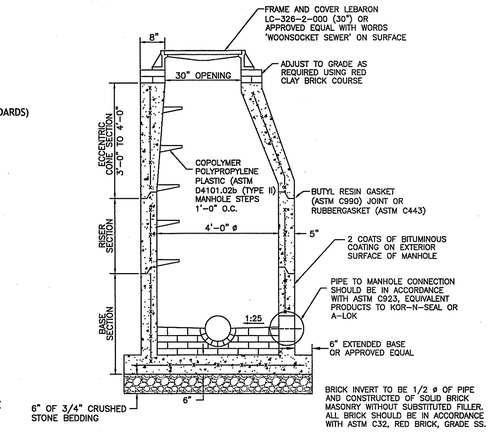

NOTES:
1. MANHOLE SHALL BE MANUFACTURED IN ACCORDANCE WITH ASTM-C478
2. INVERT AND TABLE SHALL CONSIST ENTIRELY OF BRICK AND MORTAR.
3. ANY NECESSARY ADJUSTMENTS DURING CONSTRUCTION WILL BE DONE BY SAW-CUTTING
4. ALL STEPS SHOULD BE FACTORY INSTALLED BY THE MANHOLE MANUFACTURER 12-INCHES ON CENTER WITH PROPER VERTICAL ALIGNMENT.

TYPICAL SANITARY MANHOLE DETAIL

NOT TO SCALE

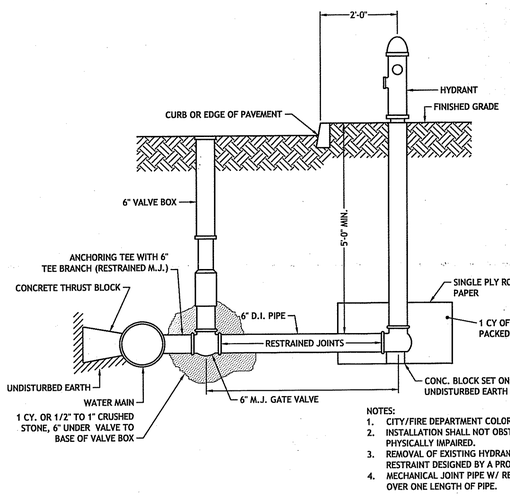

NOTES:
1. CITY/FIRE DEPARTMENT COLOR SCHEME FOR HYDRANT
2. INSTALLATION SHALL NOT OBSTRUCT SIDEWALK TO PEDESTRIAN OR PHYSICALLY IMPAIRED.
3. REMOVAL OF EXISTING HYDRANT MAY REQUIRE ADDITIONAL RESTRAINT DESIGNED BY A PROFESSIONAL ENGINEER.
4. MECHANICAL JOINT PIPE W/ RESTRAINED JOINTS FOR BRANCHES OVER ONE LENGTH OF PIPE.

HYDRANT

NOT TO SCALE

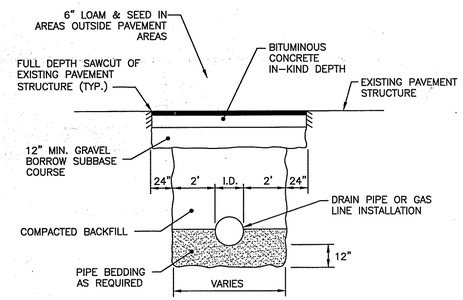

TYPICAL DRAIN TRENCH AND PAVEMENT PATCH DETAIL

NOT TO SCALE

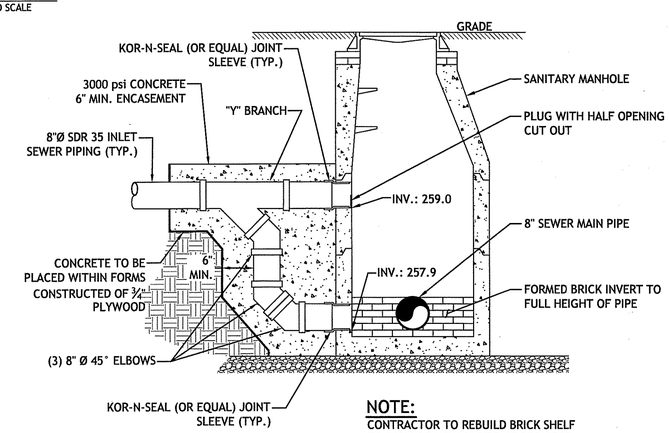

NOTE:
CONTRACTOR TO REBUILD BRICK SHELF TO INCLUDE NEW 8" PIPE, IF REQUIRED

SANITARY MANHOLE WITH EXTERNAL DROP

NOT TO SCALE

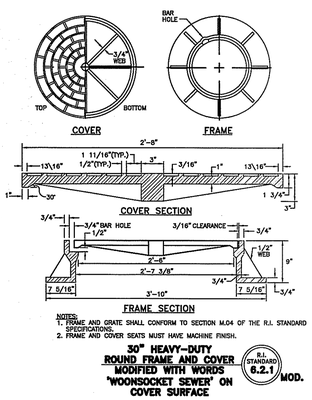

NOTES:
1. FRAME AND GRATE SHALL CONFORM TO SECTION M.04 OF THE R.I. STANDARD SPECIFICATIONS.
2. FRAME AND COVER SEATS MUST HAVE MACHINE FINISH.

30" HEAVY-DUTY ROUND FRAME AND COVER MODIFIED WITH WORDS "WOONSOCKET SEWER" ON COVER SURFACE

R.I. STANDARD 8.2.1 MOD.

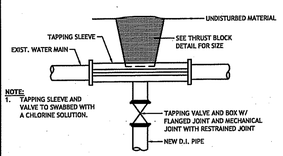

NOTE:
1. TAPPING SLEEVE AND VALVE TO SWABBED WITH A CHLORINE SOLUTION.

TAPPING SLEEVE AND VALVE

NOT TO SCALE

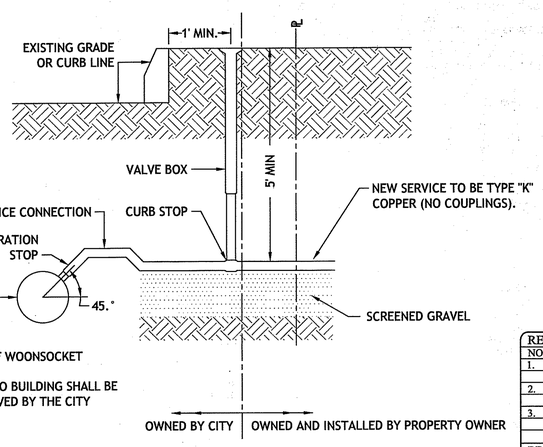

NOTE:
1. SERVICE MATERIALS PER CITY OF WOONSOCKET SPECIFICATION.
2. SERVICE LINE FROM CURB BOX TO BUILDING SHALL BE INSPECTED, TESTED AND APPROVED BY THE CITY PLUMBING INSPECTOR.

DOMESTIC WATER SERVICE CONNECTION

NOT TO SCALE

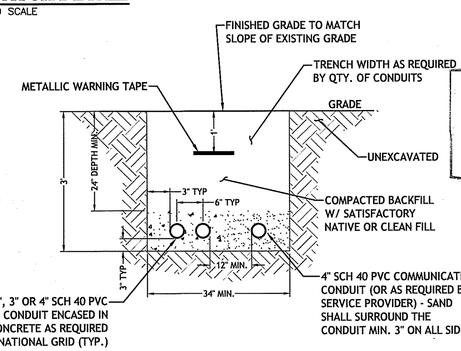

ELEC. & COMM. CONDUIT LINE TRENCH

N.T.S.

Kindly be advised that this Permit is not equivalent to a verification of the type or extent of freshwater wetlands on site.

DEPARTMENT OF ENVIRONMENTAL MANAGEMENT
OFFICE OF WATER RESOURCES
FRESHWATER WETLANDS PROGRAM
APPROVED WITH CONDITIONS
AS SPECIFIED IN THE LETTER OF APPROVAL
DATED JUL 13 2018 FILE # A-0255
NO CHANGES ALLOWED WITHOUT PRIOR APPROVAL
APPROVED PLANS MUST BE AT CONSTRUCTION SITE
Martin D. Wenck

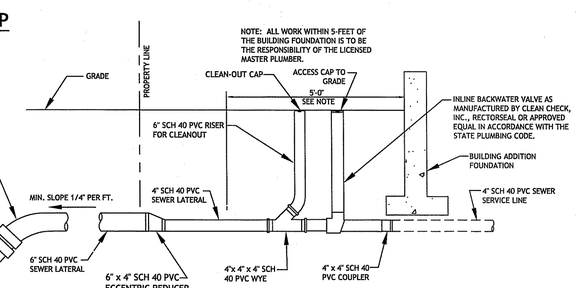

NOTES:
1. SEWER LATERAL SHALL HAVE A MINIMUM 24" SEPARATION VERTICALLY AND 10' SEPARATION HORIZONTALLY FROM ALL WATER SUPPLY LINES.
2. SEE CITY OF WOONSOCKET STANDARD DETAILS FOR ADDITIONAL SEWER SERVICE DETAILS.

SEWER SERVICE LATERAL AT BUILDING DETAIL

NOT TO SCALE

RECEIVED DEC 13 2017

REVISIONS:		
NO.	DATE.	DESCRIPTION
1.	8-23-17	City Engineering Review Comments of 8-3-17
2.	12-1-17	RIDOT Review Comments of 11-20-17
3.	12-12-17	RIDEM Review Comments of 11-30-17
DESIGNED BY:		DMD
DRAWN BY:		
CHECKED BY:		DMD
DATE:		7-1-17
PROJECT NO:		15-0001-11

SAPPHIRE ESTATES

MAJOR SUBDIVISION OF LAND PROJECT

MAP B6, LOTS 38-13 & 38-524
DIAMOND HILL ROAD AND WILCOX STREET
WOONSOCKET, RHODE ISLAND

DAVID M. D'AMICO
No. 6749
REGISTERED PROFESSIONAL ENGINEER CIVIL
12/12/17

DEtec.
D'AMICO ENGINEERING TECHNOLOGY, INC.
Civil · Transportation · Land Use
2080 Mineral Spring Ave., North Providence, RI 02911
(401) 622-1470 (401) 353-1190 fax www.dengineeringtec.com

PERMIT PLANS, NOT FOR CONSTRUCTION

SITE DETAILS NO. 3

SHEET 14 OF 14

N:\D'Amico Engineering Technology, Inc\15-0001 Marc N Nyberg\11 Diamond Hill Rd Subdivision\Sapphire Estates Subdivision Permit Plan Set 12-1-17 Rev 1.dwg Dec. 12, 2017 4:37pm