CRANSTON YARD PRECAST FACTORY

830 PHENIX AVENUE
CRANSTON, RI

OCTOBER 2021 (REVISED DECEMBER 2021)

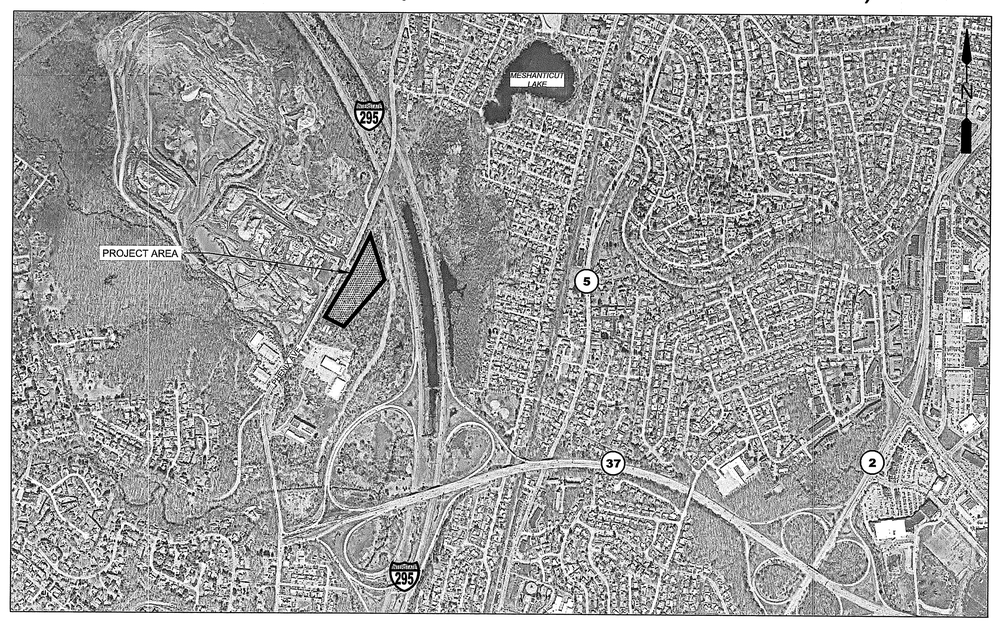

LOCATION MAP
SCALE: 1" = 800'

BASE OF LEVELS
VERTICAL DATUM: NGVD 29
HORIZONTAL DATUM: R.I. STATE PLANE, NAD 83

CBNA - BARLETTA PHASE IIIA CSO JV

CB3A CBNA - BARLETTA JOINT VENTURE

IN ASSOCIATION

AECOM

KEVIN M. AGUIAR
No. 6913
12-7-21
REGISTERED PROFESSIONAL ENGINEER CIVIL

DEPARTMENT OF ENVIRONMENTAL MANAGEMENT
OFFICE OF WATER RESOURCES
FRESHWATER WETLANDS PROGRAM
APPROVED WITH CONDITIONS
AS SPECIFIED IN THE LETTER OF APPROVAL
DATED DEC 10 2021 FILE # 21-0272
NO CHANGES ALLOWED WITHOUT PRIOR APPROVAL
APPROVED PLANS MUST BE AT CONSTRUCTION SITE
Martin D. Wencker

PERMITTING SUBMISSION

PREPARED BY:

BETA
www.BETA-Inc.com

RI Environmental Management
DEC 08 2021
Office of Water Resources

NOT FOR CONSTRUCTION

SHEET NO.
CRAN - 100 - C

PATHFILENAME: N:\7300s\7333 - AECOM - NBC Pawtucket Tunnel DB\Cranston\AutoCAD\Plan Set\100. Cover Sheet.dwg
LAST UPDATE: 2021/12/07 - 2:08
PLOT DATE: 2021/12/07 - 2:12

LIST OF DRAWINGS

GENERAL

CRAN-100-C	COVER SHEET
CRAN-101-C	LIST OF DRAWINGS
CRAN-102-C	LIST OF ABBREVIATIONS

CIVIL

CRAN-103-C	NOTES AND SYMBOLS
CRAN-104-C	PROJECT AREA PLAN
CRAN-105-C	EXISTING SITE PLAN
CRAN-106-C	SITE PREPARATION & DEMOLITION PLAN
CRAN-107-C	CONSTRUCTION SITE PLAN
CRAN-108-C	FINAL SITE PLAN
CRAN-109-C	EXISTING WATERSHED PLAN
CRAN-110-C	PROPOSED WATERSHED PLAN
CRAN-111-C	CONSTRUCTION DETAILS NO. 1
CRAN-112-C	CONSTRUCTION DETAILS NO. 2
TBMPS-802-H	PRECAST FACTORY BUILDING GENERAL LAYOUT
TBMPS-802-I	CRANSTON YARD STORAGE LAYOUT AND CONCRETE CRADLE DETAIL
TBMPS-804-B	PRECAST YARD FOUNDATION GENERAL ARRANGEMENT (1 OF 8)
TBMPS-804-B	PRECAST YARD FOUNDATION GENERAL ARRANGEMENT (2 OF 8)
TBMPS-804-B	PRECAST YARD FOUNDATION GENERAL ARRANGEMENT (3 OF 8)
TBMPS-804-B	PRECAST YARD FOUNDATION GENERAL ARRANGEMENT (4 OF 8)
TBMPS-804-B	PRECAST YARD FOUNDATION GENERAL ARRANGEMENT (5 OF 8)
TBMPS-804-B	PRECAST YARD FOUNDATION GENERAL ARRANGEMENT (6 OF 8)
TBMPS-804-B	PRECAST YARD FOUNDATION GENERAL ARRANGEMENT (7 OF 8)
TBMPS-804-B	PRECAST YARD FOUNDATION GENERAL ARRANGEMENT (8 OF 8)

DEPARTMENT OF ENVIRONMENTAL MANAGEMENT
OFFICE OF WATER RESOURCES
FRESHWATER WETLANDS PROGRAM
APPROVED WITH CONDITIONS
AS SPECIFIED IN THE LETTER OF APPROVAL
DATED DEC 10 2021 FILE # 21-0272
NO CHANGES ALLOWED WITHOUT PRIOR APPROVAL
APPROVED PLANS MUST BE AT CONSTRUCTION SITE
Martin D. Wencek

Environmental Management
DEC 08 2021
Office of Water Resources

KEVIN M. AGUIAR
No. 6913
12-7-21
REGISTERED
PROFESSIONAL ENGINEER
CIVIL

NOT FOR CONSTRUCTION

REV	DATE	BY	DESCRIPTION
--	--	--	--
--	--	--	--
C	07 DEC 21	J.C.	RIDEM RESUBMISSION
B	13 OCT 21	J.C.	RIDEM SUBMISSION
A	01 OCT 21	J.C.	60% SUBMISSION

SCALE: NO SCALE

WARNING: 0 ½ 1 — IF THIS BAR DOES NOT MEASURE 1" THEN DRAWING IS NOT TO SCALE

DESIGN BY: J. LINHARES
DRAWN BY: J. COBLEIGH
CHECKED: K. AGUIAR

ORIGINATOR: BETA www.BETA-Inc.com

CBNA - BARLETTA PHASE IIIA CSO JV
CB3A CBNA - BARLETTA JOINT VENTURE
IN ASSOCIATION AECOM

PERMITTING SUBMISSION: CRANSTON YARD PRECAST FACTORY
SHEET TITLE: LIST OF DRAWINGS
SHEET NO.: CRAN - 101 - C

PATHFILENAME: N:\7300s\7333 - AECOM - NBC Pawtucket Tunnel DB\Cranston\AutoCAD\Plan Set\101. List of Drawings.dwg
LAST UPDATE: 2021/12/07 - 1:52
PLOT DATE: 2021/12/07 - 2:12
DWG FILE: N:\7300s\7333 - AECOM - NBC Pawtucket Tunnel DB\Cranston\AutoCAD\Plan Set\101. List Of Drawings.dwg
PLOT DATE: Tuesday, December 7, 2021 2:12:13 PM
BY: JARED LINHARES

ABBREVIATIONS

3D	THREE DIMENSION
A	AMPERE, AUTOMATIC
ABAND, ABD	ABANDONED
AC	ALTERNATING CURRENT
AF	CIRCUIT BREAKER FRAMER SIZE
AM	AMMETER
AMTS	AUTOMATED TOTAL STATION
ANN	ANNUNCIATOR
APPROX	APPROXIMATE
AS	ADJUSTABLE SPEED
AT	AMPERE TRIP
ATS	AUTOMATIC TRANSFER SWITCH
AUTO	AUTOMATIC
AVE	AVENUE
AWG	AMERICAN WIRE GAUGE
BATT	BATTERY
BC	BARE COPPER
BIT	BITUMINOUS
BKR	BREAKER
BVI	BLACKSTONE VALLEY INTERCEPTOR
C	CONDUIT, CLOSED
CAP	CAPACITOR
CB	CIRCUIT BREAKER
CI	CAST IRON
CKT	CIRCUIT
CL	CENTERLINE
CLF	CHAINLINK FENCE, CURRENT LIMITING FUSE
COM	COMMON
COMM	COMMUNICATIONS
COMP	COMPARTMENT
CONC	CONCRETE
CP	CENTER POINT
CPT	CONTROL POWER TRANSFORMER
CR	CONTROL RELAY, CARD READER
CT	CURRENT TRANSFORMER
CTV	CABLE TELEVISION
DB	DESIGN BUILDER
DCS	DISTRIBUTED CONTORL SYSTEM
DISC	DISCONNECT
DISTR	DISTRIBUTION
DMH	DRAINAGE MANHOLE
DPDT	DOUBLE POLE DOUBLE THROW
DPST	DOUBLE POLE SINGLE THROW
DS	DROP SHAFT
E	EMERGENCY, EASTING COORDINATE, ELECTRICAL
EL, ELEV	ELEVATION
EMT	ELECTRICAL METALLIC TUBING
ENCL	ENCLOSURE
ER	EDGE OF ROAD
ESMT	EASEMENT
ETM	ELAPSED TIME METER
EX	EXISTING
F	FREQUENCY, FUSE, FIXED
FDR	FEEDER
FLA	FULL LOAD AMPS
FLUOR	FLUORESCENT
FM	FREQUENCY METER
FO	FIBER OPTIC
FT	FEET
FVR	FULL VOLTAGE REVERSING
FVNR	FULL VOLTAGE NON-REVERSING
G	GAS
GBR	GEOTECHNICAL BASIS REPORT
GEN	GENERATOR
GFCI	GROUND FAULT CIRCUIT INTERRUPTER
GND	GROUND
GPM	GALLONS PER MINUTE
H	HAND
HD	HEAT DETECTOR
HDPE	HIGH-DENSITY POLYETHYLENE
HH	HAND HOLE
HID	HIGH INTENSITY DISCHARGE
HOA	HAND-OFF-AUTOMATIC
HPS	HIGH PRESSURE SODIUM
HS	HAND SWITCH

ABBREVIATIONS (CONT)

HZ	HERTZ
I, INV	INVERT
ID	INSIDE DIAMETER
IMC	INTERMEDIATE METALLIC CONDUIT
INCAND	INCANDESCENT
IND	INDICATION
INST	INSTANTANEOUS
I/O	INPUT/OUTPUT
ISC	SHORT CIRCUIT CURRENT, AMPS
ISO	ISOLATION
J, JB	JUNCTION BOX
KA	KILO AMPERES
KAIC	KILO AMP INTERRUPTING CAPACITY
KCMIL	KILO CIRCULAR MILS
KVA	KILOVOLT AMPERE
L	LOCAL, LEFT
LCP	LOCAL CONTROL PANEL
LCS	LOCAL CONTROL STATION
LOC	LOCAL
LOR	LOCAL-OFF-REMOTE
LOS	LOCKOUT STOP PUSHBUTTON
LP	LIGHTING PANEL
LRA	LOCKED ROTOR AMPS
LS	LEVEL SWITCH
LTG	LIGHTING
LTS	LIGHTS
M	MOTOR CONTRACTOR COIL
mA	MILLIAMPERE
MCP	MOTOR CIRCUIT PROTECTOR
MIN	MINIMUM
MLO	MAIN LUGS ONLY
MOV	MOTOR OPERATED VALVE
MS	MANUAL MOTOR STARTER
MTL	METAL
MTS	MANUAL TRANSFER SWITCH
N	NORTHING COORDINATE
NBC	NARRAGANSETT BAY COMMISSION
NEUT	NEUTRAL
NP	NAMEPLATE
NW	NORTHWEST
O	OPEN, OFF
OL	OVERLOAD
OW	OBSERVATION WELL
PA	PUBLIC ADDRESS
PB	PUSHBUTTON, PULLBOX
PC	PHOTOCELL, POINT OF CURVATURE
PCM	PROCESS CONTROL MODULE
PF	POWER FACTOR
PFM	POWER FACTOR METER
PH	PHASE
PL	PILOT LIGHT
PM	PROGRAM MANAGER
PNLBD	PANELBOARD
PP	POWER PANELBOARD
POS	POSITION
POT	POTENTIOMETER
PRI	PRIMARY
PS	PUMP STATION
PSI	POUNDS PER SQUARE INCH
PT	POINT OF TANGENT, POTENTIAL TRANSFORMER
PTZ	PAN-TILT-ZOOM
PVC	POLYVINYL CHLORIDE
PWR	POWER
QL	QUALITY LEVEL
R	REMOTE, RIGHT, RIM
RCP	REINFORCED CONCRETE PIPE
RECPT	RECEPTACLE
RET	RETAINING
RGS	RIGID GALVANIZED STEEL
RMS	ROOT MEAN SQUARE
RTU	REMOTE TERMINAL UNIT
RVSS	REDUCED VOLTAGE SOLID STATE
SE	SOUTHEAST
SEL SW	SELECTOR SWITCH
SEQ	SEQUENCE

ABBREVIATIONS (CONT)

SHLD	SHIELDED
SIG	SIGNAL
SMH	SANITARY MANHOLE
SOE	SUPPORT OF EXCAVATION
SP	SPARE
SP HTR	SPACE HEATER
SPDT	SINGLE POLE DOUBLE THROW
SPST	SINGLE POLE SINGLE THROW
SS	SANITARY SEWER, STAINLESS STEEL
SSM	SOLID STATE METER
SSMP	SOLID STATE MOTOR PROTECTOR
ST, SH	SHUNT TIRP, STREET
STA	STATION
STR	STARTER
SSTU	SOLID STATE TRIP UNIT
SW	SWITCH
SWBD	SWITCHBOARD
SWGR	SWITCHGEAR
T, TEL	TELEPHONE
TACH	TACHOMETER
TB	TERMINAL BOX
TBM	TUNNEL BORING MACHINE
TD	TIME DELAY RELAY
TERM	TERMINAL
TM	REPEAT CYCLE TIMER
TMH	TELEPHONE MANHOLE
TS	TEMEPRATURE SWITCH
TYP	TYPICAL
UBVI	UPPER BVI
UPS	UNINTERRUPTIBLE POWER SUPPLY
V	VOLTAGE, VOLTS
VA	VOLT AMPERE
VAR	VOLT AMPERE REACTIVE
VFD	VARIABLE FREQUENCY DRIVE
VM	VOLTMETER
VP	VAPOR PROOF
W	WATTS, WIRE, WATER
WG	WATER GATE
WM	WATT METER
WP	WEATHERPROOF
WWF	WELDED WIRE FABRIC
XFMR	TRANSFORMER
XMTR	TRANSMITTER
XP	EXPLOSION PROOF

DEPARTMENT OF ENVIRONMENTAL MANAGEMENT
OFFICE OF WATER RESOURCES
FRESHWATER WETLANDS PROGRAM
APPROVED WITH CONDITIONS
AS SPECIFIED IN THE LETTER OF APPROVAL
DATED DEC 10 2021 FILE # 21-0272
NO CHANGES ALLOWED WITHOUT PRIOR APPROVAL
APPROVED PLANS MUST BE AT CONSTRUCTION SITE
Martin D. Wenck

Environmental Management
DEC 08 2021
Office of Water Resources

KEVIN M. AGUIAR
No. 6913
12-7-21
REGISTERED
PROFESSIONAL ENGINEER
CIVIL

NOT FOR CONSTRUCTION

REV	DATE	BY	DESCRIPTION
–	–	–	–
–	–	–	–
C	07 DEC 21	J.C.	RIDEM RESUBMISSION
B	13 OCT 21	J.C.	RIDEM SUBMISSION
A	01 OCT 21	J.C.	60% SUBMISSION

SCALE: NO SCALE

WARNING: 0 ½ 1 — IF THIS BAR DOES NOT MEASURE 1" THEN DRAWING IS NOT TO SCALE

DESIGN BY: J. LINHARES
DRAWN BY: J. COBLEIGH
CHECKED: K. AGUIAR

ORIGINATOR: BETA www.BETA-Inc.com

CBNA - BARLETTA PHASE IIIA CSO JV
CB3A CBNA-BARLETTA JOINT VENTURE
IN ASSOCIATION AECOM

PERMITTING SUBMISSION	SHEET TITLE	SHEET NO.
CRANSTON YARD PRECAST FACTORY	LIST OF ABBREVIATIONS	CRAN - 102 - C

PATH/FILENAME: N:\7300s\7333 - AECOM - NBC Pawtucket Tunnel DB\Cranston\AutoCAD\Plan Set\102. List of Abbreviations.dwg
LAST UPDATE: 2021/12/07 - 1:52
PLOT DATE: 2021/12/07 - 2:12
DWG FILE: N:\7300s\7333 - AECOM - NBC Pawtucket Tunnel DB\Cranston\AutoCAD\Plan Set\102. List Of Abbreviations.dwg
PLOT DATE: Tuesday, December 7, 2021 2:12:19 PM
BY: JARED LINHARES

CIVIL GENERAL NOTES

GENERAL NOTES

1. CONTRACTOR SHALL BE RESPONSIBLE FOR SOIL EROSION AND SEDIMENT CONTROL FOR DURATION OF THE PROJECT.

SOIL EROSION AND SEDIMENTATION CONTROL

1. THE CONTRACTOR SHALL FOLLOW THE APPROVED SITE SOIL EROSION AND SEDIMENT CONTROL (SESC) PLAN AND DIRECTION OF THE ENGINEER WITH REGARD TO INSTALLATION, MAINTENANCE, AND REPAIR OF ALL SESC MEASURES ON THE PROJECT SITE FOR THE FULL DURATION OF THE CONSTRUCTION PERIOD. TEMPORARY SESC MEASURES MAY INCLUDE, BUT SHALL NOT BE LIMITED TO, CONSTRUCTION ENTRANCE PADS, COMPOST FILTER SOCKS, SILT FENCE, CATCH BASIN INSERTS, TEMPORARY SEDIMENT TRAPS, ETC.
2. ALL SESC MEASURES SHALL BE INSTALLED BY THE CONTRACTOR AND INSPECTED BY THE ENGINEER PRIOR TO THE START OF CONSTRUCTION. THE SESC MEASURES SHALL BE REGULARLY INSPECTED, CLEANED AND MAINTAINED THROUGHOUT THE DURATION OF CONSTRUCTION OPERATIONS IN ACCORDANCE WITH THE SESC PLAN. SESC MEASURES SHALL ALSO BE INSPECTED AND CLEANED AFTER ALL SIGNIFICANT STORM EVENTS AS STIPULATED BY THE SESC PLAN AND AT THE DIRECTION OF THE OWNER OR ENGINEER.
3. CONTRACTOR SHALL MAINTAIN AN ADEQUATE SUPPLY OF SESC MEASURE MATERIALS ON SITE TO BE INSTALLED IN AREAS WHERE EXISTING SESC MEASURES HAVE FAILED OR ARE NECESSARY AS DETERMINED BY THE ENGINEER. NO WORK OR STORAGE OF CONSTRUCTION EQUIPMENT WILL BE PERMITTED OUTSIDE THE LIMIT OF DISTURBANCE.
4. THE CONTRACTOR SHALL COORDINATE WITH THE ENGINEER FOR REGULAR INSPECTION AND REPORTING REQUIREMENTS.
5. SESC MEASURES SHALL BE MAINTAINED UNTIL SITE WORK IS COMPLETE AND ALL EXPOSED SOILS ARE SATISFACTORILY STABILIZED. UPON PERMANENT STABILIZATION OF ALL DISTURBED SOILS, THE SESC MEASURES SHALL BE REMOVED AND PROPERLY DISPOSED. PROVIDE SESC MEASURES AT PERIMETERS OF ALL EXCAVATION AREAS, DISTURBED SURFACES AND AT ALL CATCH BASINS ADJACENT TO DISTURBED AREAS. PROVIDE COMPOST FILTER SOCKS IN ACCORDANCE WITH DIVISION 2 SPECIFICATION REQUIREMENTS AND AS SHOWN ON THE CIVIL DETAIL DRAWINGS.
6. ALL MITIGATIVE FEATURES, FACILITIES AND SYSTEMS OF TREATMENT AND CONTROL THAT MAY BE INSTALLED OR USED SHALL BE PROPERLY MAINTAINED TO PREVENT HARM TO AREAS ADJACENT TO THE SITE.

SURVEY AND CONTROL

1. LIDAR AND IMAGERY WERE ACQUIRED IN THE FALL 2021 FOR HYDRAULIC MODELING PURPOSES.
2. HORIZONTAL DATUM IS BASED ON THE RHODE ISLAND STATE PLANE COORDINATE SYSTEM NORTH AMERICAN DATUM OF 1983 (NAD83).
3. VERTICAL DATUM IS BASED ON THE NATIONAL GEODETIC VERTICAL DATUM (NGVD88). EXISTING 2-FT CONTOURS SHOWN WERE TAKEN FROM THE 2011 STATEWIDE LIDAR DATA.

TOPOGRAPHY AND MAPPING SYMBOLS

- 125 — MAJOR CONTOURS
- MINOR CONTOURS
- TOP OF SLOPE
- TOE OF SLOPE
- P/L — PROPERTY LINE
- R/W — RIGHT-OF-WAY LINE
- GB — GRADE BREAK
- R — RIDGE LINE
- ESMT — EASEMENT LINE
- TEMP ESMT — TEMPORARY EASEMENT LINE
- TRAIL OR DIRT ROAD
- FLOW LINE
- FEMA FLOOD BOUNDARY
- EDGE OF WETLANDS
- RAILROAD
- GUARDRAIL (PERMANENT)
- GUARDRAIL (REMOVABLE)
- VEGETATION
- WELL
- LIMIT OF CRMC 200-FOOT CONTIGUOUS AREA
- LIMIT OF 200-FOOT RIVERBANK WETLAND
- TOP OF COASTAL BANK AND BLUFF
- LIMIT OF FEMA FLOOD ZONE VE

PIPING AND UTILITIES

UTILITIES (SINGLE LINE) SEE PIPE SCHEDULE FOR ADDITONAL PIPING INFO

- G — UTILITIES (SIZE WHERE NOTED)
- G — UNDERGROUND

G	NATURAL GAS LINE
HPG	HIGH PRESSURE GAS LINE
LPG	LIQUID PETROLIUM GAS LINE
W	WATER
PW	POTABLE WATER
SDR	STORM DRAIN
SS	SANITARY SEWER
TEL	TELEPHONE
COMM	COMMUNICATIONS LINE
FOC	FIBER OPTIC CABLE
CATV	CABLE TV
E	POWER
UNID	UNIDENTIFIED
ABND	ABANDONED UTILITY

CONTROL SYMBOLS

- ### — SITE COORDINATES (SEE TABLE ON DRAWINGS)
- N XXXXXXX / E XXXXXXX — SITE COORDINATES
- XXX.XX — FINISHED ELEVATION
- (XXX.XX) — EXISTING ELEVATION

STRUCTURES

- JERSEY BARRIER
- FENCE (CHAINLINK)
- COMPOST FILTER SOCK
- STRUCTURE
- STRUCTURE (BELOW GRADE)
- CATCH BASIN

DEPARTMENT OF ENVIRONMENTAL MANAGEMENT
OFFICE OF WATER RESOURCES
FRESHWATER WETLANDS PROGRAM
APPROVED WITH CONDITIONS
AS SPECIFIED IN THE LETTER OF APPROVAL
DATED DEC 10 2021 FILE # 21-0272
NO CHANGES ALLOWED WITHOUT PRIOR APPROVAL
APPROVED PLANS MUST BE AT CONSTRUCTION SITE
Martin D. Wencek

Environmental Management
DEC 08 2021
Office of Water Resources

KEVIN M. AGUIAR
No. 6913
12-7-21
REGISTERED PROFESSIONAL ENGINEER
CIVIL

NOT FOR CONSTRUCTION

REV	DATE	BY	DESCRIPTION
–	–	–	–
–	–	–	–
C	07 DEC 21	J.C.	RIDEM RESUBMISSION
B	13 OCT 21	J.C.	RIDEM SUBMISSION
A	01 OCT 21	J.C.	60% SUBMISSION

SCALE: NO SCALE

WARNING: 0 ½ 1 — IF THIS BAR DOES NOT MEASURE 1" THEN DRAWING IS NOT TO SCALE

DESIGN BY: J. LINHARES
DRAWN BY: J. COBLEIGH
CHECKED: K. AGUIAR

ORIGINATOR: BETA www.BETA-Inc.com

CBNA - BARLETTA PHASE IIIA CSO JV
CB3A CBNA - BARLETTA JOINT VENTURE
IN ASSOCIATION AECOM

PERMITTING SUBMISSION: CRANSTON YARD PRECAST FACTORY
SHEET TITLE: NOTES AND SYMBOLS
SHEET NO.: CRAN - 103 - C
4 of 23

PATH/FILENAME: N:\7300s\7333 - AECOM - NBC Pawtucket Tunnel DB\Cranston\AutoCAD\Plan Set\103. Notes and Symbols.dwg
LAST UPDATE: 2021/12/07 - 1:52
PLOT DATE: 2021/12/07 - 2:12
DWG FILE: N:\7300s\7333 - AECOM - NBC Pawtucket Tunnel DB\Cranston\AutoCAD\Plan Set\103. Notes And Symbols.dwg
PLOT DATE: Tuesday, December 7, 2021 2:12:25 PM
BY: JARED LINHARES

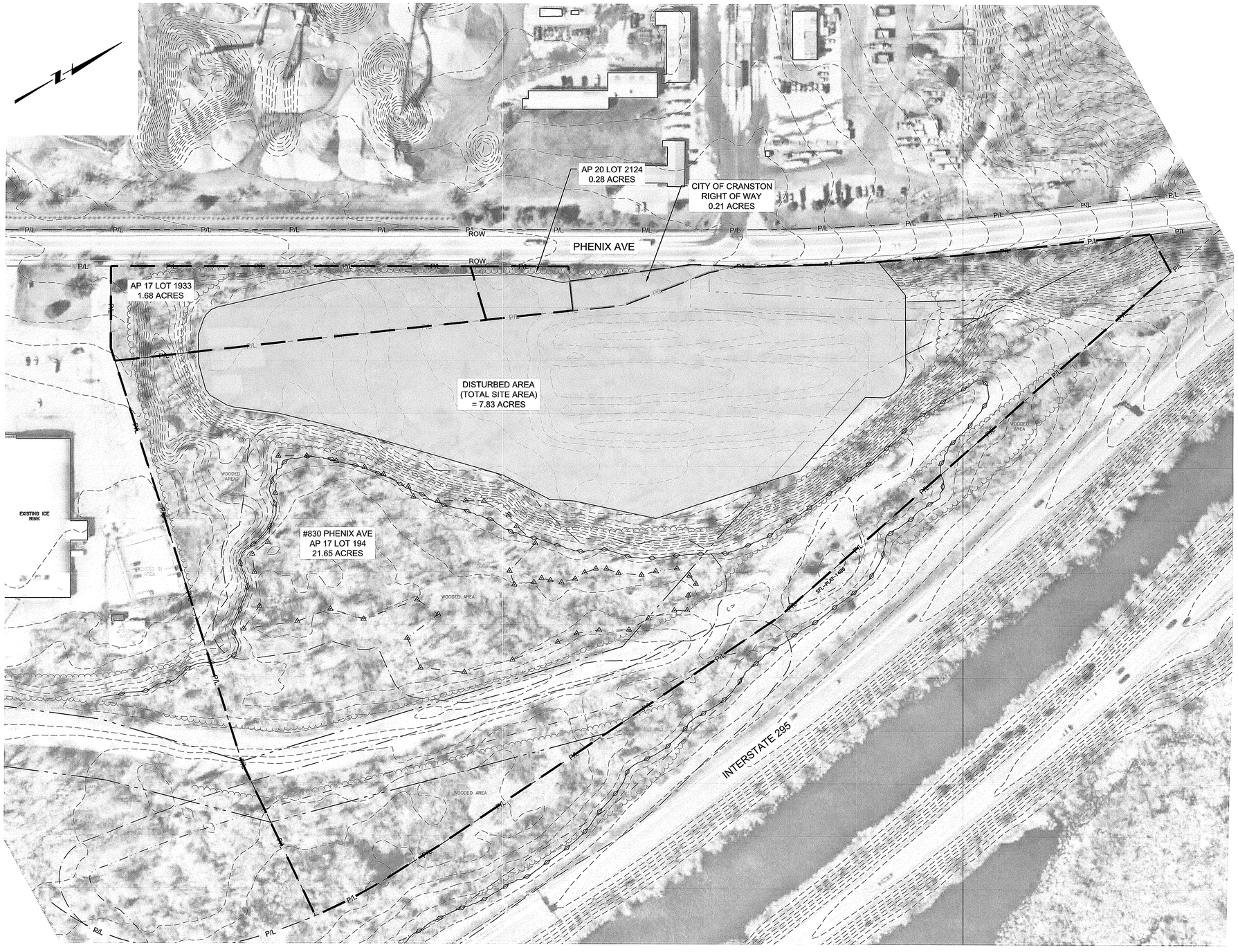

GENERAL SHEET NOTES

1. THE HORIZONTAL COORDINATE SYSTEM IS RHODE ISLAND STATE PLANE, NAD83. THE VERTICAL DATUM IS NGVD88. EXISTING 2-FT CONTOURS SHOWN WERE TAKEN FROM THE 2011 STATEWIDE LIDAR DATA.
2. THE PROJECT AREA PLAN DEPICTS THE AVAILABLE WORK AREA TO FACILITATE CONSTRUCTION OF THE CRANSTON YARD PRECAST FACTORY AND ASSOCIATED WORK AT THE SITE.

LEGEND

	DISTURBED AREA (TOTAL PROJECT AREA)	7.83 ACRES
	TOTAL PARCEL AREA	23.82 ACRES

Kindly be advised that this Permit is not equivalent to a verification of the type or extent of freshwater wetlands on site.

DEPARTMENT OF ENVIRONMENTAL MANAGEMENT
OFFICE OF WATER RESOURCES
FRESHWATER WETLANDS PROGRAM
APPROVED WITH CONDITIONS
AS SPECIFIED IN THE LETTER OF APPROVAL
DATED DEC 10 2021 FILE # 21-0271
NO CHANGES ALLOWED WITHOUT PRIOR APPROVAL
APPROVED PLANS MUST BE AT CONSTRUCTION SITE
Martin D. Wencek

Environmental Management
DEC 08 2021
Office of Water Resources

KEVIN M. AGUIAR
No. 6913
12-7-21
REGISTERED PROFESSIONAL ENGINEER
CIVIL

NOT FOR CONSTRUCTION

REV	DATE	BY	DESCRIPTION
--	--	--	--
--	--	--	--
C	07 DEC 21	J.C.	RIDEM RESUBMISSION
B	13 OCT 21	J.C.	RIDEM SUBMISSION
A	01 OCT 21	J.C.	60% SUBMISSION

SCALE: 1" = 80'

WARNING: 0 ½ 1 — IF THIS BAR DOES NOT MEASURE 1" THEN DRAWING IS NOT TO SCALE

DESIGN BY: J. LINHARES
DRAWN BY: J. COBLEIGH
CHECKED: K. AGUIAR

ORIGINATOR: BETA www.BETA-Inc.com

CBNA - BARLETTA PHASE IIIA CSO JV
CB3A CBNA - BARLETTA JOINT VENTURE
IN ASSOCIATION AECOM

PERMITTING SUBMISSION: CRANSTON YARD PRECAST FACTORY

SHEET TITLE: PROJECT AREA PLAN

SHEET NO.: CRAN - 104 - C

PATH\FILENAME: N:\7300s\7333 - AECOM - NBC Pawtucket Tunnel DB\Cranston\AutoCAD\Plan Set\104, Project Area Plan.dwg
LAST UPDATE: 2021/12/07 - 1:52
PLOT DATE: 2021/12/07 - 2:12
DWG FILE: N:\7300s\7333 - AECOM - NBC Pawtucket Tunnel DB\Cranston\AutoCAD\Plan Set\104, Project Area Plan.dwg
PLOT DATE: Tuesday, December 7, 2021 2:12:35 PM
BY: JARED LINHARES

GENERAL SHEET NOTES

1. THE HORIZONTAL COORDINATE SYSTEM IS RHODE ISLAND STATE PLANE, NAD83. THE VERTICAL DATUM IS NGVD88. EXISTING 2-FT CONTOURS SHOWN WERE TAKEN FROM THE 2011 STATEWIDE LIDAR DATA.

SHEET KEYNOTES

A. JERSEY BARRIERS TO REMAIN
B. COMPACTED GRAVEL (TYP. ENTIRE SITE)
C. TREE LINE TO REMAIN AND PROTECTED AS NEEDED
D. ASPHALT DRIVEWAY APRON TO REMAIN
E. CONCRETE DEBRIS PILE

ENVIRONMENTAL AREAS

F. WETLAND BOUNDARY
G. LIMIT OF 50 FOOT PERIMETER WETLAND
H. FEMA FLOOD DELINEATION ZONE AE, EL 55.

LEGEND

FIELD INFILTROMETER TEST LOCATIONS

Kindly be advised that this Permit is not equivalent to a verification of the type or extent of freshwater wetlands on site.

DEPARTMENT OF ENVIRONMENTAL MANAGEMENT
OFFICE OF WATER RESOURCES
FRESHWATER WETLANDS PROGRAM
APPROVED WITH CONDITIONS
AS SPECIFIED IN THE LETTER OF APPROVAL
DATED DEC 10 2021 FILE # 21-0792
NO CHANGES ALLOWED WITHOUT PRIOR APPROVAL
APPROVED PLANS MUST BE AT CONSTRUCTION SITE
Martin D. Wencek

Environmental Management
DEC 08 2021
Office of Water Resources

KEVIN M. AGUIAR
No. 6913
12-7-21
REGISTERED PROFESSIONAL ENGINEER CIVIL

NOT FOR CONSTRUCTION

REV	DATE	BY	DESCRIPTION
--	--	--	--
--	--	--	--
C	07 DEC 21	J.C.	RIDEM RESUBMISSION
B	13 OCT 21	J.C.	RIDEM SUBMISSION
A	01 OCT 21	J.C.	60% SUBMISSION

SCALE: 1" = 50'

WARNING: 0 ½ 1 — IF THIS BAR DOES NOT MEASURE 1" THEN DRAWING IS NOT TO SCALE

DESIGN BY: J. LINHARES
DRAWN BY: J. COBLEIGH
CHECKED: K. AGUIAR

ORIGINATOR: BETA www.BETA-Inc.com

CBNA - BARLETTA PHASE IIIA CSO JV
CB3A CBNA - BARLETTA JOINT VENTURE
IN ASSOCIATION AECOM

PERMITTING SUBMISSION	SHEET TITLE	SHEET NO.
CRANSTON YARD PRECAST FACTORY	EXISTING SITE PLAN	CRAN - 105 - C

PATHFILENAME: N:\7300s\7333 - AECOM - NBC Pawtucket Tunnel DB\Cranston\AutoCAD\Plan Set\105. Existing Site Plan.dwg
LAST UPDATE: 2021/12/07 - 1:54
PLOT DATE: 2021/12/07 - 2:12
DWG FILE: N:\7300s\7333 - AECOM - NBC Pawtucket Tunnel DB\Cranston\AutoCAD\Plan Set\105. Existing Site Plan.dwg
PLOT DATE: Tuesday, December 7, 2021 2:12:43 PM
BY: JARED LINHARES

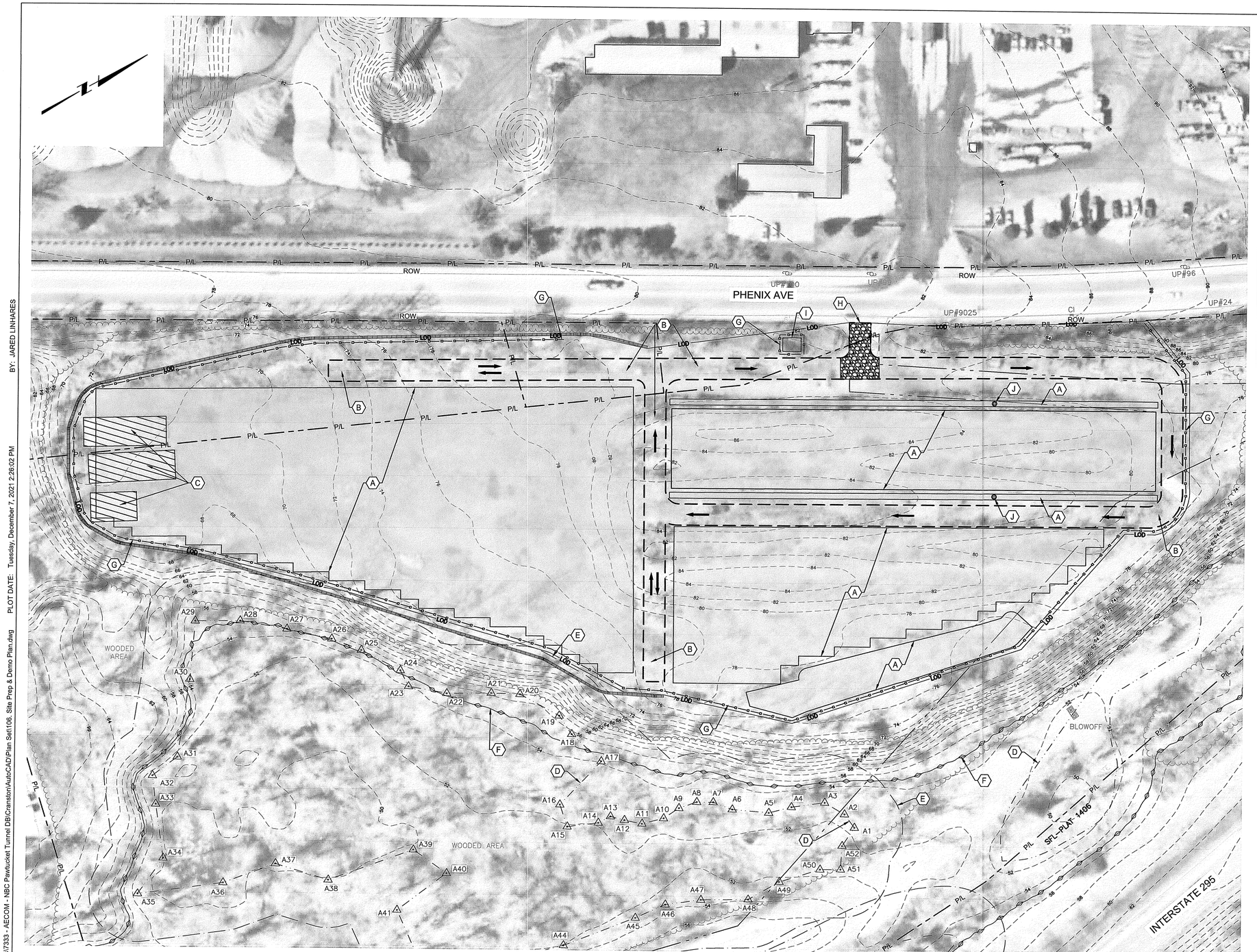

GENERAL SHEET NOTES

1. THE HORIZONTAL COORDINATE SYSTEM IS RHODE ISLAND STATE PLANE, NAD83. THE VERTICAL DATUM IS NGVD88. EXISTING 2-FT CONTOURS SHOWN WERE TAKEN FROM THE 2011 STATEWIDE LIDAR DATA.

SHEET KEYNOTES

A. CLEAR AND GRUB AREAS AS NEEDED WITHIN FOOTPRINT OF PROPOSED BUILDING, STORMWATER BMPS, AND PRECAST PLANK STAGING AREAS.

B. EXISTING COMPACTED GRAVEL WILL BE UTILIZED BY VEHICLES AS AN ACCESS ROUTE.

C. REMOVE AND LEGALLY DISPOSE OF CONCRETE DEBRIS PILES.

ENVIRONMENTAL AREAS

D. WETLAND BOUNDARY

E. LIMIT OF 50 FOOT PERIMETER WETLAND

F. FEMA FLOOD DELINEATION ZONE AE, EL 55.

EROSION CONTROL MEASURES

G. COMPOST FILTER SOCK

H. CONSTRUCTION ENTRANCE (20' X 50' MINIMUM)

I. CONCRETE WASHOUT AREA

J. TYPICAL CB SEDIMENT CONTROL DEVICE

Kindly be advised that this Permit is not equivalent to a verification of the type or extent of freshwater wetlands on site.

DEPARTMENT OF ENVIRONMENTAL MANAGEMENT
OFFICE OF WATER RESOURCES
FRESHWATER WETLANDS PROGRAM
APPROVED WITH CONDITIONS
AS SPECIFIED IN THE LETTER OF APPROVAL
DATED: DEC 10 2021 FILE # 21-0272
NO CHANGES ALLOWED WITHOUT PRIOR APPROVAL
APPROVED PLANS MUST BE AT CONSTRUCTION SITE
Martin D. Wenck

Environmental Management
DEC 08 2021
Office of Water Resources

KEVIN M. AGUIAR
No. 6913
12-7-21
REGISTERED PROFESSIONAL ENGINEER
CIVIL

NOT FOR CONSTRUCTION

REV	DATE	BY	DESCRIPTION
--	--	--	--
--	--	--	--
C	07 DEC 21	J.C.	RIDEM RESUBMISSION
B	13 OCT 21	J.C.	RIDEM SUBMISSION
A	01 OCT 21	J.C.	60% SUBMISSION

SCALE: 1" = 50'

WARNING: 0 ½ 1 — IF THIS BAR DOES NOT MEASURE 1" THEN DRAWING IS NOT TO SCALE

DESIGN BY: J. LINHARES
DRAWN BY: J. COBLEIGH
CHECKED: K. AGUIAR

ORIGINATOR: BETA www.BETA-Inc.com

CBNA - BARLETTA PHASE IIIA CSO JV
CB3A CBNA-BARLETTA JOINT VENTURE
IN ASSOCIATION AECOM

PERMITTING SUBMISSION: CRANSTON YARD PRECAST FACTORY

SHEET TITLE: SITE PREPARATION & DEMOLITION PLAN

SHEET NO. CRAN - 106 - C

7 of 23

DWG FILE: N:\7300s\7333 - AECOM - NBC Pawtucket Tunnel DB\Cranston\AutoCAD\Plan Set\106, Site Prep & Demo Plan.dwg
PLOT DATE: Tuesday, December 7, 2021 2:26:02 PM
BY: JARED LINHARES
PATHFILENAME: N:\7300s\7333 - AECOM - NBC Pawtucket Tunnel DB\Cranston\AutoCAD\Plan Set\106, Site Prep & Demo Plan.dwg
LAST UPDATE: 2021/12/07 - 2:25
PLOT DATE: 2021/12/07 - 2:26

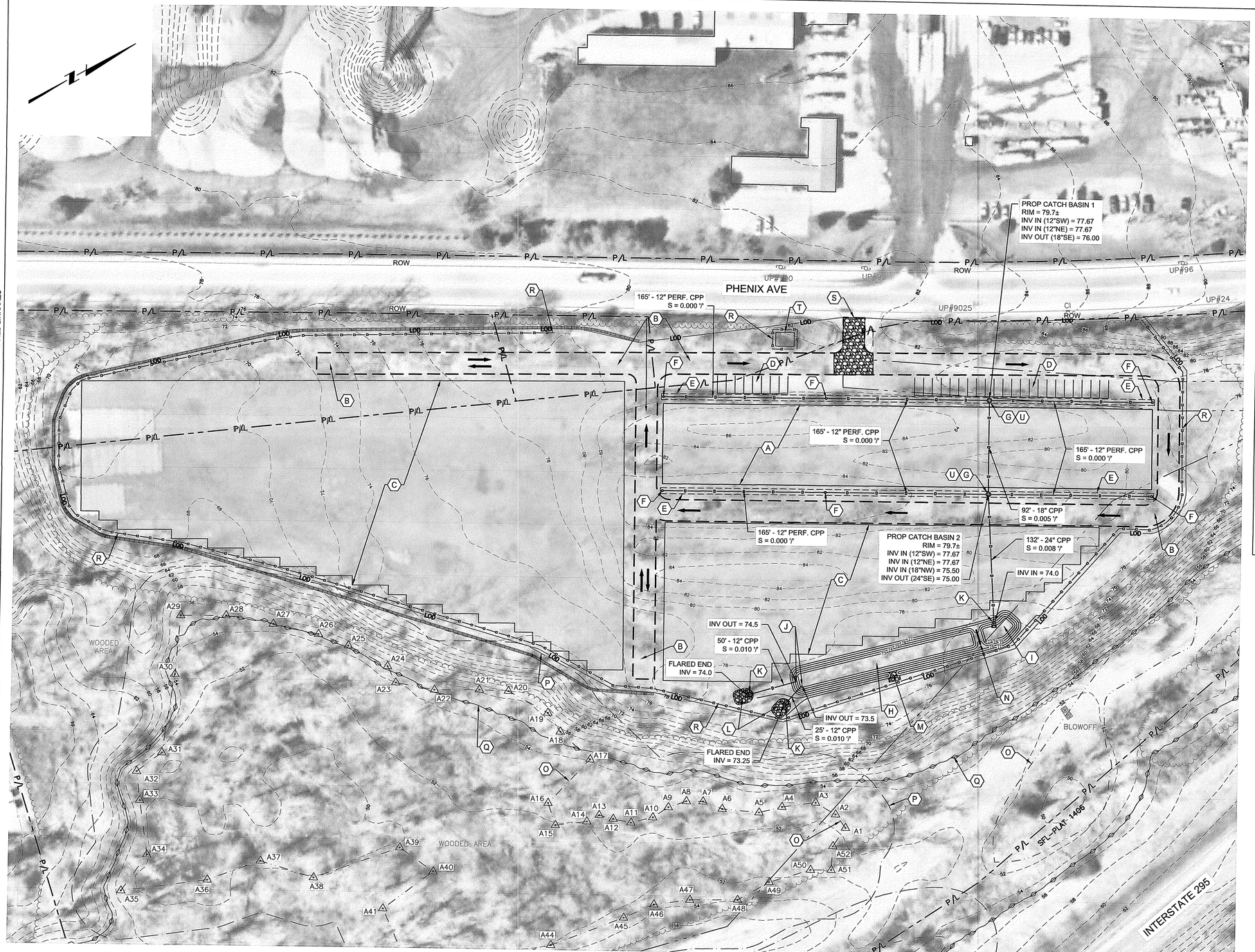

GENERAL SHEET NOTES

1. THE HORIZONTAL COORDINATE SYSTEM IS RHODE ISLAND STATE PLANE, NAD83. THE VERTICAL DATUM IS NGVD88. EXISTING 2-FT CONTOURS SHOWN WERE TAKEN FROM THE 2011 STATEWIDE LIDAR DATA.

SHEET KEYNOTES

A. PRECAST FACTORY BUILDING

B. EXISTING COMPACTED GRAVEL WILL BE UTILIZED BY VEHICLES AS AN ACCESS ROUTE.

C. PRECAST PLANK STAGING AREAS

D. PARKING SPACES (30 TOTAL); EXISTING COMPACTED GRAVEL WILL BE UTILIZED FOR PARKING.

E. UNDERGROUND STONE TRENCH (504' LONG, 6' WIDE, SEE DETAIL)

F. 12" CLEANOUT

G. 4' DIAMETER DEEP SUMP CATCH BASIN WITH ALTERNATE SLAB TOP AND 4" FRAME AND GRATE

H. INFILTRATION BASIN

I. SEDIMENT FOREBAY

J. 12" PIPE END BASIN OUTLET

K. FLARED END

L. RIPRAP STILLING BASIN

M. 5' WIDE RIPRAP EMERGENCY OVERFLOW SPILLWAY (EL 76.25)

N. CONCRETE CURB OVERFLOW WEIR (EL 75.0)

ENVIRONMENTAL AREAS

O. WETLAND BOUNDARY

P. LIMIT OF 50 FOOT PERIMETER WETLAND

Q. FEMA FLOOD DELINEATION ZONE AE, EL 55.

EROSION CONTROL MEASURES

R. COMPOST FILTER SOCK

S. CONSTRUCTION ENTRANCE (20' X 50' MINIMUM)

T. CONCRETE WASHOUT AREA

U. TYPICAL CB SEDIMENT CONTROL DEVICE

Kindly be advised that this Permit is not equivalent to a verification of the type or extent of freshwater wetlands on site.

DEPARTMENT OF ENVIRONMENTAL MANAGEMENT
OFFICE OF WATER RESOURCES
FRESHWATER WETLANDS PROGRAM
APPROVED WITH CONDITIONS
AS SPECIFIED IN THE LETTER OF APPROVAL
DATED DEC 10 2021 FILE # 21-0222
NO CHANGES ALLOWED WITHOUT PRIOR APPROVAL
APPROVED PLANS MUST BE AT CONSTRUCTION SITE
Martin D. Wencek

Environmental Management
DEC 08 2021
Office of Water Resources

KEVIN M. AGUIAR
No. 6913
12-7-21
REGISTERED PROFESSIONAL ENGINEER CIVIL

NOT FOR CONSTRUCTION

REV	DATE	BY	DESCRIPTION
--	--	--	--
--	--	--	--
C	07 DEC 21	J.C.	RIDEM RESUBMISSION
B	13 OCT 21	J.C.	RIDEM SUBMISSION
A	01 OCT 21	J.C.	60% SUBMISSION

SCALE: 1" = 50'

WARNING: 0 ½ 1 — IF THIS BAR DOES NOT MEASURE 1" THEN DRAWING IS NOT TO SCALE

DESIGN BY: J. LINHARES
DRAWN BY: J. COBLEIGH
CHECKED: K. AGUIAR

ORIGINATOR: BETA www.BETA-Inc.com

CBNA - BARLETTA PHASE IIIA CSO JV
CB3A CBNA - BARLETTA JOINT VENTURE
IN ASSOCIATION AECOM

PERMITTING SUBMISSION: CRANSTON YARD PRECAST FACTORY

SHEET TITLE: CONSTRUCTION SITE PLAN

SHEET NO.: CRAN - 107 - C

8 of 23

PATHFILENAME: N:\7300s\7333 - AECOM - NBC Pawtucket Tunnel DB\Cranston\AutoCAD\Plan Set\107. Construction Site Plan.dwg
LAST UPDATE: 2021/12/07 - 2:25
PLOT DATE: 2021/12/07 - 2:26
DWG FILE: N:\7300s\7333 - AECOM - NBC Pawtucket Tunnel DB\Cranston\AutoCAD\Plan Set\107. Construction Site Plan.dwg
PLOT DATE: Tuesday, December 7, 2021 2:26:13 PM
BY: JARED LINHARES

GENERAL SHEET NOTES

1. THE HORIZONTAL COORDINATE SYSTEM IS RHODE ISLAND STATE PLANE, NAD83. THE VERTICAL DATUM IS NGVD88. EXISTING 2-FT CONTOURS SHOWN WERE TAKEN FROM THE 2011 STATEWIDE LIDAR DATA.

SHEET KEYNOTES

A. PRECAST FACTORY BUILDING AND FOUNDATION TO BE REMOVED; AREA TO BE STABILIZED WITH EXISTING SITE GRAVEL.

B. EXISTING JERSEY BARRIER TO REMAIN.

C. EXISTING COMPACTED GRAVEL ACCESS ROUTE TO REMAIN.

D. PRECAST STAGING AREAS TO BE REMOVED; AREAS TO BE STABILIZED WITH EXISTING SITE GRAVEL.

E. STORMWATER DRAINAGE AND BMPS TO REMAIN IN PLACE FOLLOWING PROJECT COMPLETION.

Kindly be advised that this Permit is not equivalent to a verification of the type or extent of freshwater wetlands on site.

DEPARTMENT OF ENVIRONMENTAL MANAGEMEN
OFFICE OF WATER RESOURCES
FRESHWATER WETLANDS PROGRAM
APPROVED WITH CONDITIONS
AS SPECIFIED IN THE LETTER OF APPROVAL
DATED DEC. 10 2021 FILE # 21-0222
NO CHANGES ALLOWED WITHOUT PRIOR APPROVAL
APPROVED PLANS MUST BE AT CONSTRUCTION SITE
Martin D. Wencek

Environmental Management
DEC 08 2021
Office of Water Resources

KEVIN M. AGUIAR
No. 6913
12-7-21
REGISTERED PROFESSIONAL ENGINEER CIVIL

NOT FOR CONSTRUCTION

REV	DATE	BY	DESCRIPTION
--	--	--	--
--	--	--	--
C	07 DEC 21	J.C.	RIDEM RESUBMISSION
B	13 OCT 21	J.C.	RIDEM SUBMISSION
A	01 OCT 21	J.C.	60% SUBMISSION

SCALE: 1" = 50'

WARNING: 0 ½ 1 — IF THIS BAR DOES NOT MEASURE 1" THEN DRAWING IS NOT TO SCALE

DESIGN BY: J. LINHARES
DRAWN BY: J. COBLEIGH
CHECKED: K. AGUIAR

ORIGINATOR: BETA www.BETA-Inc.com

CBNA - BARLETTA PHASE IIIA CSO JV
CB3A CBNA - BARLETTA JOINT VENTURE
IN ASSOCIATION AECOM

PERMITTING SUBMISSION	SHEET TITLE	SHEET NO.
CRANSTON YARD PRECAST FACTORY	FINAL SITE PLAN	CRAN - 108 - C

PATH/FILENAME: N:\7300s\7333 - AECOM - NBC Pawtucket Tunnel DB\Cranston\AutoCAD\Plan Set\108. Final Site Plan.dwg
LAST UPDATE: 2021/12/07 - 1:31
PLOT DATE: 2021/12/07 - 2:13
DWG FILE: N:\7300s\7333 - AECOM - NBC Pawtucket Tunnel DB\Cranston\AutoCAD\Plan Set\108. Final Site Plan.dwg
PLOT DATE: Tuesday, December 7, 2021 2:13:15 PM
BY: JARED LINHARES

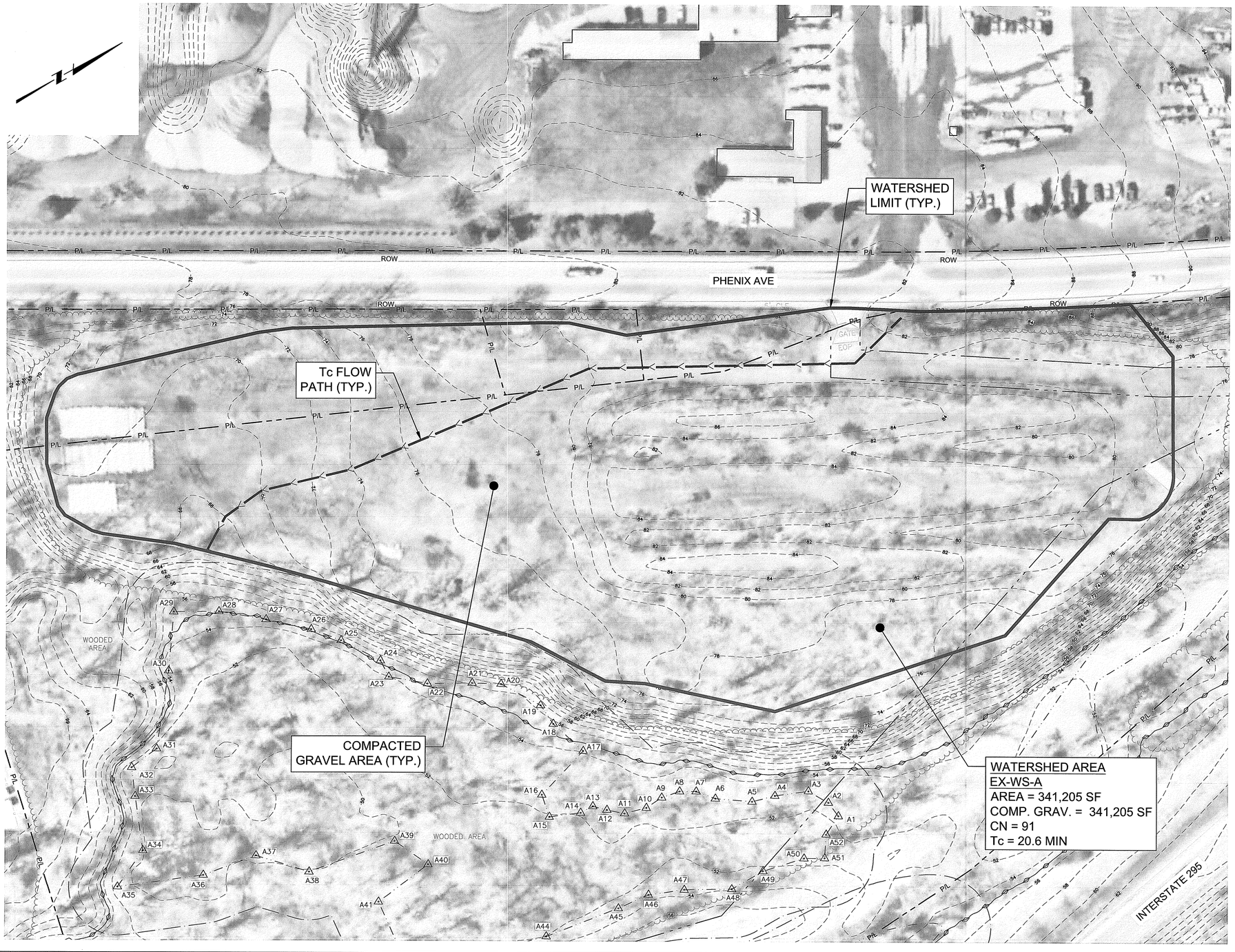

GENERAL SHEET NOTES

1. THE PROJECT AREA IS COMPRISED ALMOST ENTIRELY OF EXISTING COMPACTED GRAVEL. BASED ON FIELD INFILTRATION TESTS AND RISDISM GUIDELINES, THE COMPACTED GRAVEL IS CONSIDERED IMPERVIOUS FOR THE PURPOSES OF THE STORMWATER ANALYSIS AND DESIGN.

LEGEND

- WATERSHED LIMIT
- Tc FLOW PATH
- EXISTING COMPACTED GRAVEL AREA (AREAS WITH NO HATCH)

Kindly be advised that this Permit is not equivalent to a verification of the type or extent of freshwater wetlands on site.

DEPARTMENT OF ENVIRONMENTAL MANAGEMENT
OFFICE OF WATER RESOURCES
FRESHWATER WETLANDS PROGRAM
APPROVED WITH CONDITIONS
AS SPECIFIED IN THE LETTER OF APPROVAL
DATED DEC 10 2021 FILE # 21-0277
NO CHANGES ALLOWED WITHOUT PRIOR APPROVAL
APPROVED PLANS MUST BE AT CONSTRUCTION SITE
Martin D. Wencek

Environmental Management
DEC 08 2021
Office of Water Resources

KEVIN M. AGUIAR
No. 6913
12-7-21
REGISTERED PROFESSIONAL ENGINEER CIVIL

NOT FOR CONSTRUCTION

REV	DATE	BY	DESCRIPTION
--	--	--	--
--	--	--	--
C	07 DEC 21	J.C.	RIDEM RESUBMISSION
B	13 OCT 21	J.C.	RIDEM SUBMISSION
A	01 OCT 21	J.C.	60% SUBMISSION

SCALE: 1" = 50'

WARNING: 0 ½ 1 — IF THIS BAR DOES NOT MEASURE 1" THEN DRAWING IS NOT TO SCALE

DESIGN BY: J. LINHARES
DRAWN BY: J. COBLEIGH
CHECKED: K. AGUIAR

ORIGINATOR: BETA www.BETA-Inc.com

CBNA - BARLETTA PHASE IIIA CSO JV
CB3A CBNA-BARLETTA JOINT VENTURE
IN ASSOCIATION AECOM

PERMITTING SUBMISSION	SHEET TITLE	SHEET NO.
CRANSTON YARD PRECAST FACTORY	EXISTING WATERSHED PLAN	CRAN - 109 - C

DWG FILE: N:\7300s\7333 - AECOM - NBC Pawtucket Tunnel DB\Cranston\AutoCAD\Plan Set\109. Existing Watershed Plan.dwg PLOT DATE: Tuesday, December 7, 2021 2:13:24 PM BY: JARED LINHARES
PLOT DATE: 2021/12/07 - 2:13 LAST UPDATE: 2021/12/07 - 1:32 PATH/FILENAME: N:\7300s\7333 - AECOM - NBC Pawtucket Tunnel DB\Cranston\AutoCAD\Plan Set\109. Existing Watershed Plan.dwg

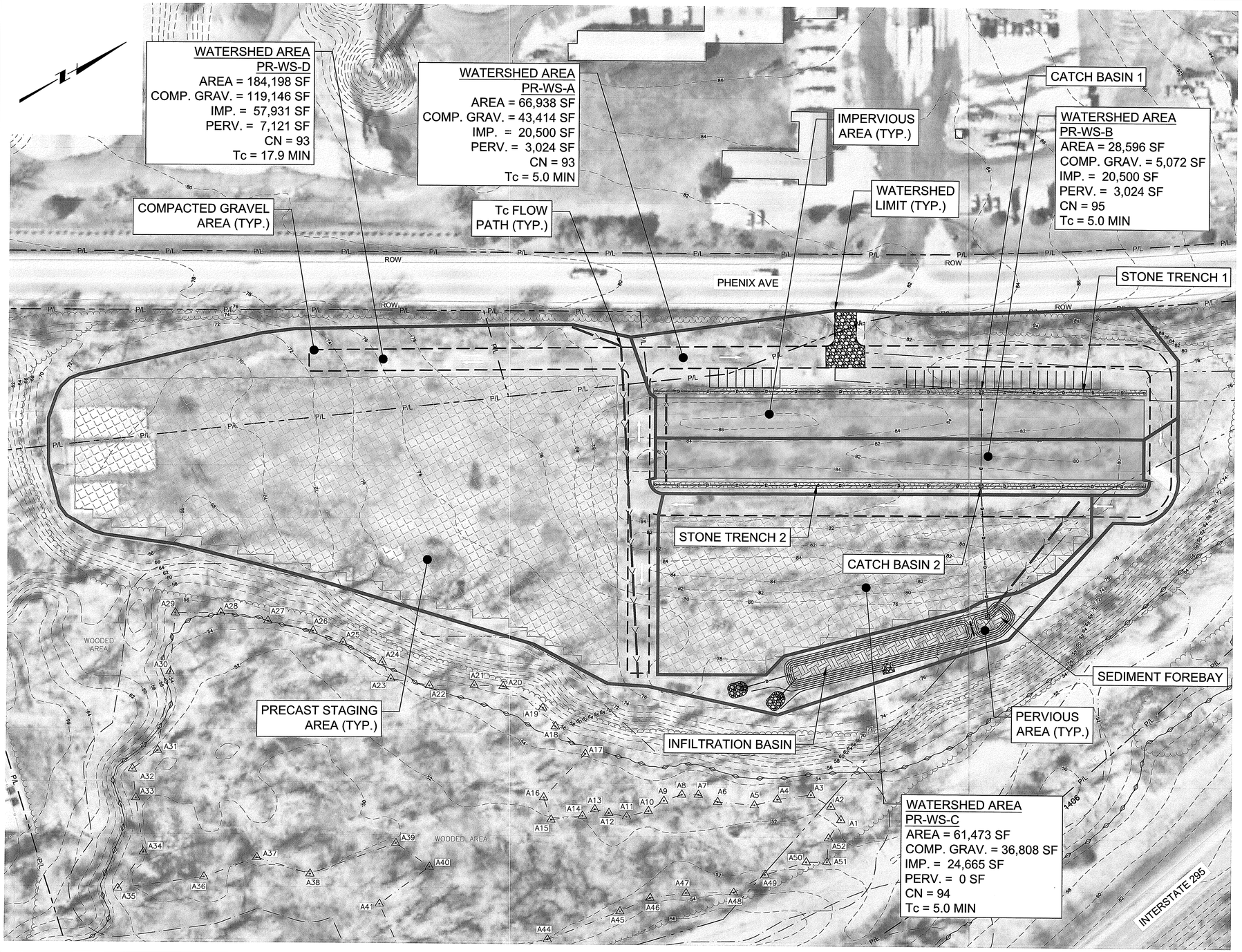

GENERAL SHEET NOTES

1. THE PROJECT AREA IS COMPRISED ALMOST ENTIRELY OF EXISTING COMPACTED GRAVEL. BASED ON FIELD INFILTRATION TESTS AND RISDISM GUIDELINES, THE COMPACTED GRAVEL IS CONSIDERED IMPERVIOUS FOR THE PURPOSES OF THE STORMWATER ANALYSIS AND DESIGN.
2. THE PROPOSED WATERSHED PLAN REPRESENTS THE TEMPORARY, INTERIM CONDITION OF THE SITE DURING CONSTRUCTION AND OPERATION OF THE PRECAST FACTORY IN SUPPORT OF THE PAWTUCKET TUNNEL PROJECT. AFTER THE ANTICIPATED 18-MONTH DURATION, THE BUILDING AND PRECAST PLANKS WILL BE REMOVED FROM SITE AND STABLIZED WITH PROCESSED GRAVEL. THE STORMWATER BMPS WILL BE LEFT IN PLACE FOLLOWING CONSTRUCTION.

LEGEND

- WATERSHED LIMIT
- Tc FLOW PATH
- IMPERVIOUS AREA (BUILDING ROOF)
- PRECAST STAGING AREA (50% IMPERVIOUS, 50% COMPACTED GRAVEL)
- PERVIOUS AREA (STORMWATER BMPS)
- EXISTING COMPACTED GRAVEL AREA TO REMAIN (AREAS WITH NO HATCH)

Kindly be advised that this Permit is not equivalent to a verification of the type or extent of freshwater wetlands on site.

DEPARTMENT OF ENVIRONMENTAL MANAGEMEN
OFFICE OF WATER RESOURCES
FRESHWATER WETLANDS PROGRAM
APPROVED WITH CONDITIONS
AS SPECIFIED IN THE LETTER OF APPROVAL
DATED DEC 10 2021 FILE # 21-0272
NO CHANGES ALLOWED WITHOUT PRIOR APPROVAL
APPROVED PLANS MUST BE AT CONSTRUCTION SITE
Martin D. Wencek

Environmental Management
DEC 08 2021
Office of Water Resources

KEVIN M. AGUIAR
No. 6913
12-7-21
REGISTERED PROFESSIONAL ENGINEER CIVIL

NOT FOR CONSTRUCTION

REV	DATE	BY	DESCRIPTION
--	--	--	--
--	--	--	--
C	07 DEC 21	J.C.	RIDEM RESUBMISSION
B	13 OCT 21	J.C.	RIDEM SUBMISSION
A	01 OCT 21	J.C.	60% SUBMISSION

SCALE: 1" = 50'

WARNING: 0 ½ 1 — IF THIS BAR DOES NOT MEASURE 1" THEN DRAWING IS NOT TO SCALE

DESIGN BY: J. LINHARES
DRAWN BY: J. COBLEIGH
CHECKED: K. AGUIAR

ORIGINATOR: BETA www.BETA-Inc.com

CBNA - BARLETTA PHASE IIIA CSO JV
CB3A CBNA-BARLETTA JOINT VENTURE
IN ASSOCIATION AECOM

PERMITTING SUBMISSION	SHEET TITLE	SHEET NO.
CRANSTON YARD PRECAST FACTORY	PROPOSED WATERSHED PLAN	CRAN - 110 - C

PATH/FILENAME: N:\7300a\7333 - AECOM - NBC Pawtucket Tunnel DB\Cranston\AutoCAD\Plan Set\110. Proposed Watershed Plan.dwg
LAST UPDATE: 2021/12/07 - 2:15
PLOT DATE: 2021/12/07 - 2:19
DWG FILE: N:\7300a\7333 - AECOM - NBC Pawtucket Tunnel DB\Cranston\AutoCAD\Plan Set\110. Proposed Watershed Plan.dwg PLOT DATE: Tuesday, December 7, 2021 2:19:03 PM
BY: JARED LINHARES

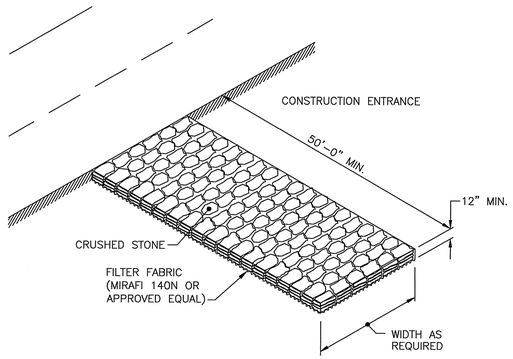

NOTE:
SHALL BE IN ACCORDANCE WITH SECTION 211 OF THE R.I. STANDARD SPECIFICATIONS.

CONSTRUCTION ACCESS

NOT TO SCALE

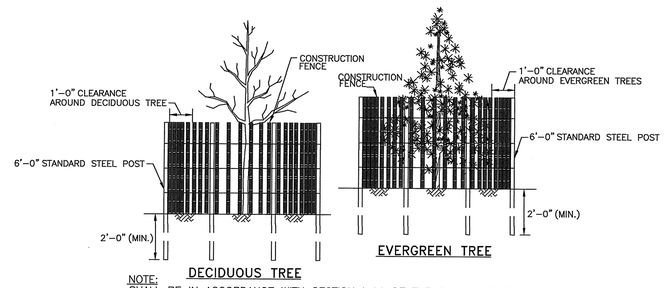

NOTE:
SHALL BE IN ACCORDANCE WITH SECTION L.11 OF THE R.I. STANDARD SPECIFICATIONS.

DRIP LINE TREE PROTECTION DEVICE
FOR EXISTING TREES

NOT TO SCALE

R.I. STANDARD 51.1.1

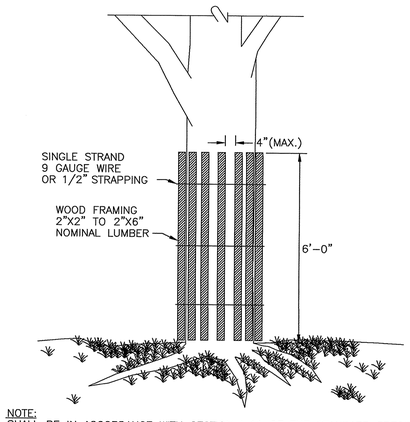

NOTE:
SHALL BE IN ACCORDANCE WITH SECTION L.11 OF THE STANDARD SPECIFICATIONS.

TREE PROTECTION DEVICE

NOT TO SCALE

R.I. STANDARD 51.1.0

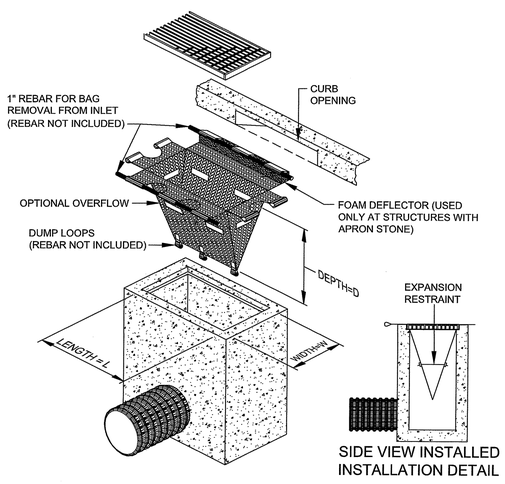

CATCH BASIN SEDIMENT CONTROL DEVICE
(WITH OPTIONAL CURB DEFLECTOR)

NOT TO SCALE

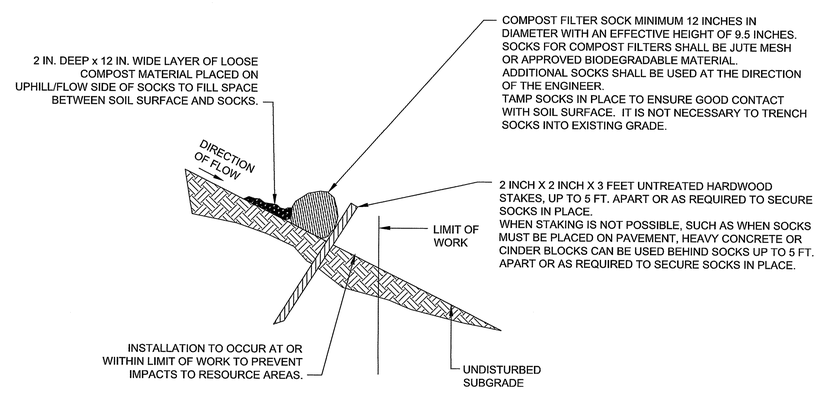

NOTES:

1. PROVIDE A MINIMUM SOCK DIAMETER OF 12 INCHES FOR SLOPES UP TO 50 FEET IN LENGTH WITH A SLOPE RATIO OF 3H:1V OR STEEPER. LONGER SLOPES OF 3H:1V MAY REQUIRE LARGER SOCK DIAMETER OR ADDITIONAL COURSING OF FILTER SOCKS TO CREATE A FILTER BERM. REFER TO MANUFACTURER'S RECOMMENDATIONS FOR SITUATIONS WITH LONGER OR STEEPER SLOPES.
2. INSTALL SOCKS ALONG CONTOURS AND PERPENDICULAR TO SHEET OR CONCENTRATED FLOW.
3. DO NOT INSTALL IN PERENNIAL, EPHEMERAL OR INTERMITTENT STREAMS.
4. CONFIGURE SOCKS AROUND EXISTING SITE FEATURES TO MINIMIZE SITE DISTURBANCE AND MAXIMIZE CAPTURE AREA OF STORMWATER RUN-OFF.
5. IF SOCK NETTING MUST BE JOINED, FIT BEGINNING OF NEW SOCK OVER END OF OLD SOCK, OVERLAPPING BY 2 FEET AND STACK OVERLAP. IF SOCK NETTING IS NOT JOINED, OVERLAP OLD SOCK WITH NEW BY MINIMUM OF 2 FEET.

COMPOST FILTER SOCK

NOT TO SCALE

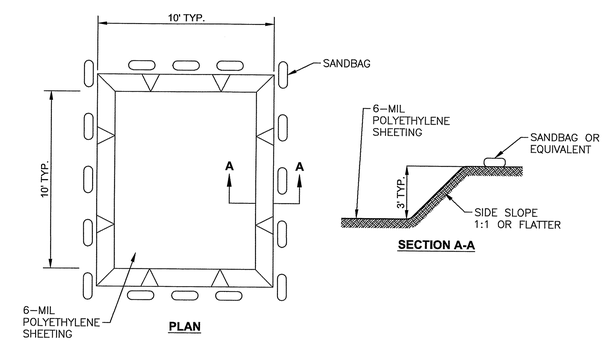

CONCRETE WASHOUT AREA DETAIL

NOT TO SCALE

DEPARTMENT OF ENVIRONMENTAL MANAGEMENT
OFFICE OF WATER RESOURCES
FRESHWATER WETLANDS PROGRAM
APPROVED WITH CONDITIONS
AS SPECIFIED IN THE LETTER OF APPROVAL
DATED DEC 10 2021 FILE # 21-0220
NO CHANGES ALLOWED WITHOUT PRIOR APPROVAL
APPROVED PLANS MUST BE AT CONSTRUCTION SITE
Martin D. Wenzel

Environmental Management
DEC 08 2021
Office of Water Resources

KEVIN M. AGUIAR
No. 6913
12-7-21
REGISTERED
PROFESSIONAL ENGINEER
CIVIL

NOT FOR CONSTRUCTION

REV	DATE	BY	DESCRIPTION
--	--	--	--
--	--	--	--
C	07 DEC 21	J.C.	RIDEM RESUBMISSION
B	13 OCT 21	J.C.	RIDEM SUBMISSION
A	01 OCT 21	J.C.	60% SUBMISSION

SCALE: NO SCALE

WARNING: 0 ½ 1 — IF THIS BAR DOES NOT MEASURE 1" THEN DRAWING IS NOT TO SCALE

DESIGN BY: J. LINHARES
DRAWN BY: J. COBLEIGH
CHECKED: K. AGUIAR

ORIGINATOR: BETA www.BETA-Inc.com

CBNA - BARLETTA PHASE IIIA CSO JV

CB3A CBNA - BARLETTA JOINT VENTURE

IN ASSOCIATION AECOM

PERMITTING SUBMISSION: CRANSTON YARD PRECAST FACTORY

SHEET TITLE: CONSTRUCTION DETAILS NO. 1

SHEET NO.: CRAN - 111 - C

PATH/FILENAME: N:\7300s\7333 - AECOM - NBC Pawtucket Tunnel DB\Cranston\AutoCAD\Plan Set\111-112. Construction Details 1-2.dwg
LAST UPDATE: 2021/12/07 - 1:59
PLOT DATE: 2021/12/07 - 2:13
DWG FILE: N:\7300s\7333 - AECOM - NBC Pawtucket Tunnel DB\Cranston\AutoCAD\Plan Set\111-112. Construction Details 1-2.dwgPLOT DATE: Tuesday, December 7, 2021 2:13:41 PM
BY: JARED LINHARES

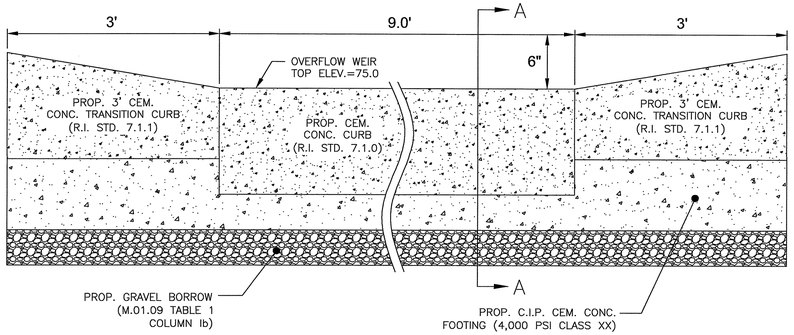

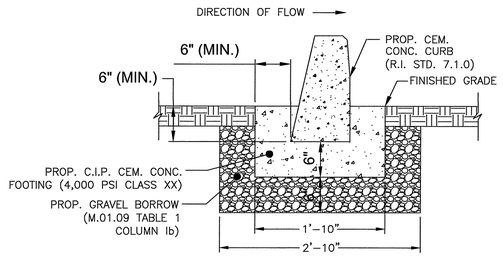

SECTION A–A

CONCRETE CURB OVERFLOW WEIR DETAILS

NOT TO SCALE

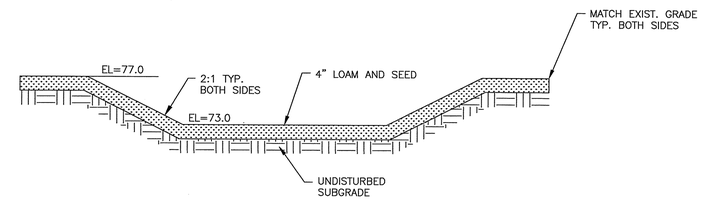

INFILTRATION BASIN CROSS-SECTION

NOT TO SCALE

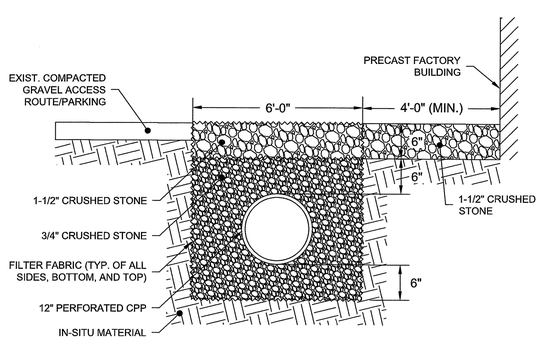

UNDERGROUND STONE TRENCH

NOT TO SCALE

NOTES:
1. UNDERGROUND STONE TRENCH SHALL MEET THE MATERIAL AND INSTALLATION REQUIREMENTS OF SECTION 2.3.3 OF THE RHODE ISLAND DEPARTMENT OF TRANSPORTATION LINEAR STORMWATER MANUAL.
2. FILTER FABRIC SHALL BE MIRAFI 140N, OR APPROVED EQUAL.

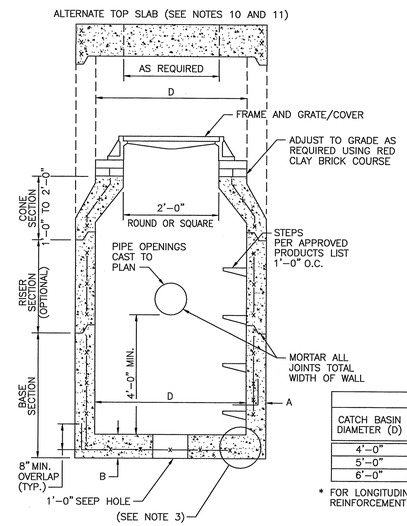

TABLE 1			
CATCH BASIN DIAMETER (D)	A	B	CIRCUMFERENTIAL STEEL REINFORCEMENT REQUIRED *
4'–0"	5"	6"	0.12 SQ. IN./LIN. FT.
5'–0"	6"	7"	0.15 SQ. IN./LIN. FT.
6'–0"	7"	8"	0.18 SQ. IN./LIN. FT.

* FOR LONGITUDINAL (VERTICAL STANDING) REINFORCEMENT REFER TO ASTM C478, ITEM 8.1.2

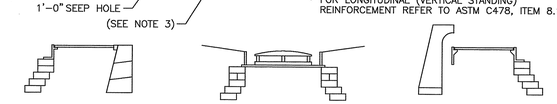

TYPE "D" TYPE "R" TYPE "F"

TYPE CATCH BASIN AS REQUIRED

NOTES:
1. SHALL BE IN ACCORDANCE WITH SECTION 702 OF THE R.I. STANDARD SPECIFICATIONS.
2. SEE TABLE 1 FOR STEEL REINFORCEMENT REQUIREMENTS.
3. STEEL REINFORCEMENT FOR BASE SECTION BOTTOM SHALL BE A MINIMUM OF 0.12 SQ. IN./LIN. FT. (BOTH WAYS).
4. STEPS SHALL CONFORM TO STD. 5.3.0 AND SHALL BE INSTALLED AT THE CASTING PLANT.
5. ONE POUR MONOLITHIC BASE SECTION.
6. ANY NECESSARY ADJUSTMENTS DURING CONSTRUCTION WILL BE DONE BY SAW–CUTTING AND/OR CORING ONLY. NO JACKHAMMERS, HAMMERS AND CHISELS OR PNEUMATIC TOOLS WILL BE ALLOWED.
7. CORBEL MADE OF RED CLAY BRICK WILL BE PERMITTED FOR THE "CONE SECTION" OF THE 4'–0" CATCH BASIN ONLY.
8. FOR CATCH BASIN TYPES "D" AND "F" STEPS MUST BE INSTALLED ON THE CURB SIDE OF THE STRUCTURE.
9. THE CENTERLINE OF THE OPENING MUST BE WITHIN 2'–0" FROM THE STEPS.
10. ALTERNATE TOP SLAB IS STEEL REINFORCED TO MEET OR EXCEED H–25 LOADING (SEE STD. 4.7.2).
11. ALTERNATE TOP SLAB IS ONLY FOR USE WHEN REDUCING SECTION DOES NOT FIT BECAUSE OF STRUCTURE DEPTH.
12. REFER TO STD. 5.2.0 FOR MAXIMUM PIPE SIZES.
13. PROVIDE A MINIMUM OF 12 INCHES OF COMPACTED GRAVEL BORROW AROUND THE STRUCTURE.

PRECAST 4'–0", 5'–0", OR 6'–0" ROUND MODIFIED CATCH BASIN

NOT TO SCALE

R.I. STANDARD 4.4.0M

DEPARTMENT OF ENVIRONMENTAL MANAGEMENT
OFFICE OF WATER RESOURCES
FRESHWATER WETLANDS PROGRAM
APPROVED WITH CONDITIONS
AS SPECIFIED IN THE LETTER OF APPROVAL
DATED DEC 10 2021 FILE # 21-0272
NO CHANGES ALLOWED WITHOUT PRIOR APPROVAL
APPROVED PLANS MUST BE AT CONSTRUCTION SITE

Martin D. Wencek

Environmental Management
DEC 08 2021
Office of Water Resources

KEVIN M. AGUIAR
No. 6913
12-7-21
REGISTERED
PROFESSIONAL ENGINEER
CIVIL

NOT FOR CONSTRUCTION

REV	DATE	BY	DESCRIPTION
–	–	–	–
–	–	–	–
C	07 DEC 21	J.C.	RIDEM RESUBMISSION
B	13 OCT 21	J.C.	RIDEM SUBMISSION
A	01 OCT 21	J.C.	60% SUBMISSION

SCALE: NO SCALE

WARNING: 0 ½ 1 — IF THIS BAR DOES NOT MEASURE 1" THEN DRAWING IS NOT TO SCALE

DESIGN BY: J. LINHARES
DRAWN BY: J. COBLEIGH
CHECKED: K. AGUIAR

ORIGINATOR: BETA www.BETA-Inc.com

CBNA - BARLETTA PHASE IIIA CSO JV

CB3A CBNA-BARLETTA JOINT VENTURE

IN ASSOCIATION AECOM

PERMITTING SUBMISSION: CRANSTON YARD PRECAST FACTORY

SHEET TITLE: CONSTRUCTION DETAILS NO. 2

SHEET NO.: CRAN - 112 - C

PATH/FILENAME: N:\7300s\7333 - AECOM - NBC Pawtucket Tunnel DB\Cranston\AutoCAD\Plan Set\111-112. Construction Details 1-2.dwg
LAST UPDATE: 2021/12/07 - 1:59
PLOT DATE: 2021/12/07 - 2:13
DWG FILE: N:\7300s\7333 - AECOM - NBC Pawtucket Tunnel DB\Cranston\AutoCAD\Plan Set\111-112. Construction Details 1-2.dwgPLOT DATE: Tuesday, December 7, 2021 2:13:42 PM
BY: JARED LINHARES

PRECAST FACTORY LAYOUT

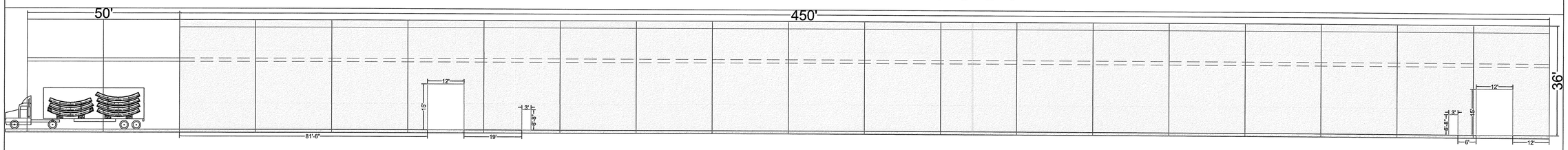

Longitudinal view
1/16" = 1'-0"

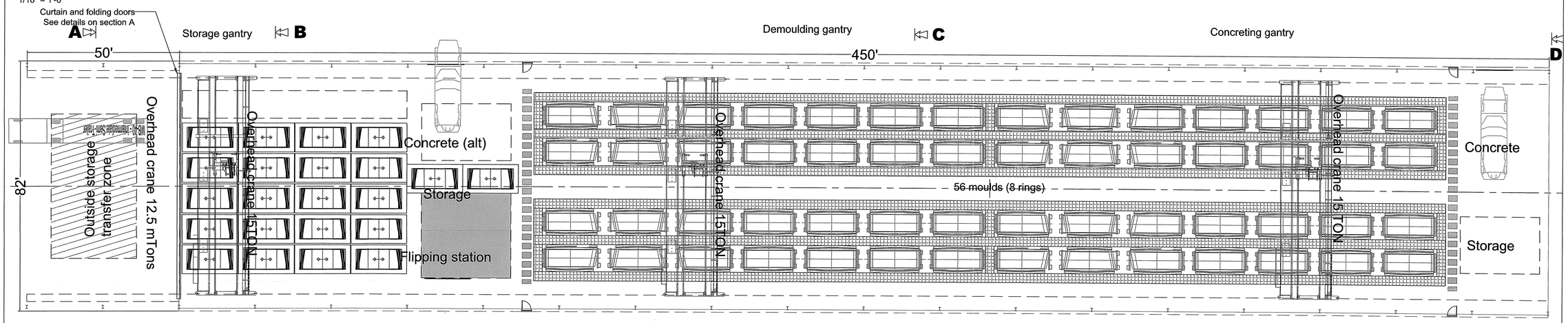

Plan view
1/16" = 1'-0"

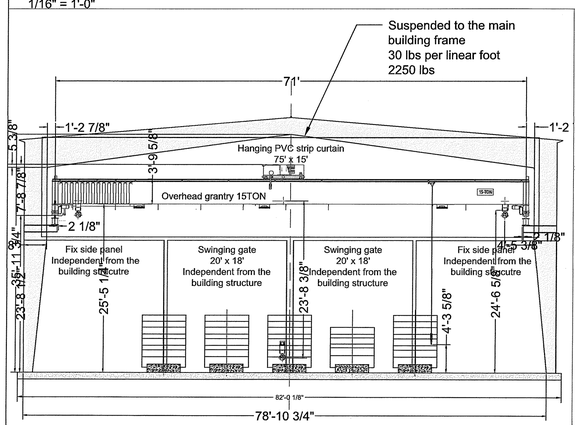

Section A-A
3/32" = 1'-0"

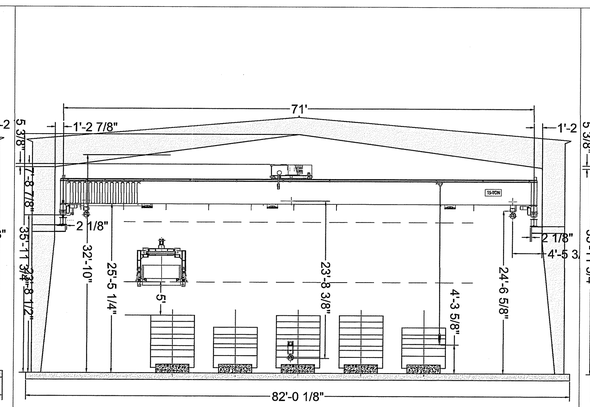

Section B-B
3/32" = 1'-0"

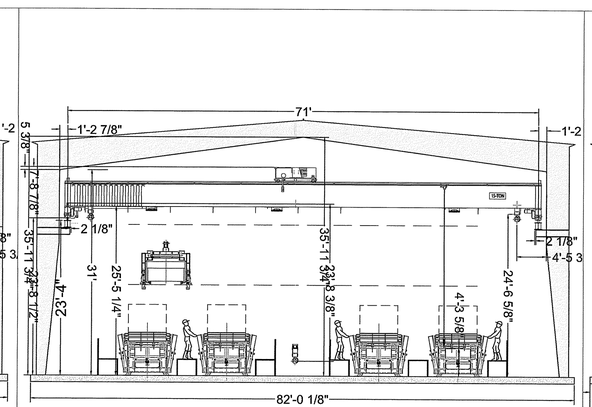

Section C-C
3/32" = 1'-0"

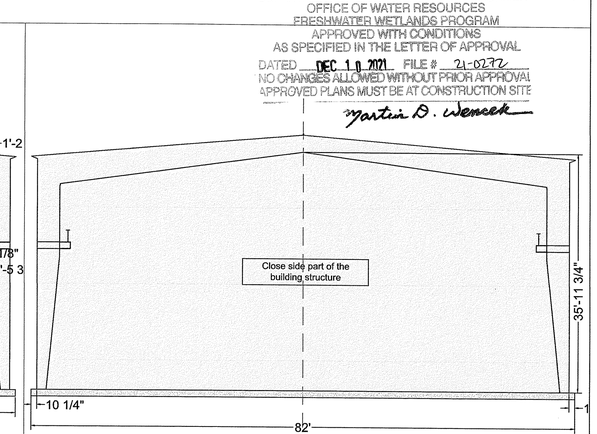

Section D-D
3/32" = 1'-0"

DEPARTMENT OF ENVIRONMENTAL MANAGEMENT
OFFICE OF WATER RESOURCES
FRESHWATER WETLANDS PROGRAM
APPROVED WITH CONDITIONS
AS SPECIFIED IN THE LETTER OF APPROVAL
DATED DEC 10 2021 FILE # 21-0272
NO CHANGES ALLOWED WITHOUT PRIOR APPROVAL
APPROVED PLANS MUST BE AT CONSTRUCTION SITE
Martin D. Wenzek

Environmental Management
DEC 08 2021
Office of Water Resources

REV	DATE	BY	DESCRIPTION
H	07/15/2021	NAM	UPDATE OF SITE ARRANGEMENT AND THE EARTHWORKS
G	06/09/2021	NAM	UPDATE OF SITE ARRANGEMENT
F	06/07/2021	NAM	UPDATE OF THE TOPOGRAPHY
E	05/20/2021	CBU	GENERAL SITE ARRANGMENT WITH PLATFORM
D	05/14/2021	CBU	8 MOLDS & 788 RINGS STORAGE

SCALE

SCALE

WARNING
0 ½ 1
IF THIS BAR DOES NOT MEASURE 1" THEN DRAWING IS NOT TO SCALE

DESIGN BY: FSOUCHE
DRAWN BY: NAMIRA
CHECKED: SPOLYCARPE

CBNA - BARLETTA PHASE IIIA CSO JV
IN ASSOCIATION
AECOM

NARRAGANSETT BAY COMMISSION
PHASE III COMBINED SEWER
OVERFLOW PROGRAM
Stantec
PARE

DESIGN PHASE	SHEET TITLE	SHEET NO.
METHODS CONTRACT NO. 308.01C NBC PAWTUCKET TUNNEL TUNNEL PRECAST SEGMENTS	PRECAST FACTORY GENERAL LAYOUT	TBMPS - 802 - H 14 of 23

PATH/FILENAME: C:\Users\N.Amira\BCNA\CBNA_Barletta_PhaseIIIA_Site - Documents\11_Technical Documents\06_Methods\I- TBM\TUNNEL PRECAST SEGMENT\SITE\TBMPS-802\TBMPS-802-H\TBMPS-802-H - Precast yard.dwg
LAST UPDATE: 2021/07/21 - 3:34
PLOT DATE: 2021/07/22 - 3:05

PRECAST FACTORY LAYOUT
SEGMENTS STORAGE (990) RINGS
Mobile Crane : GROVE RT890E 90T

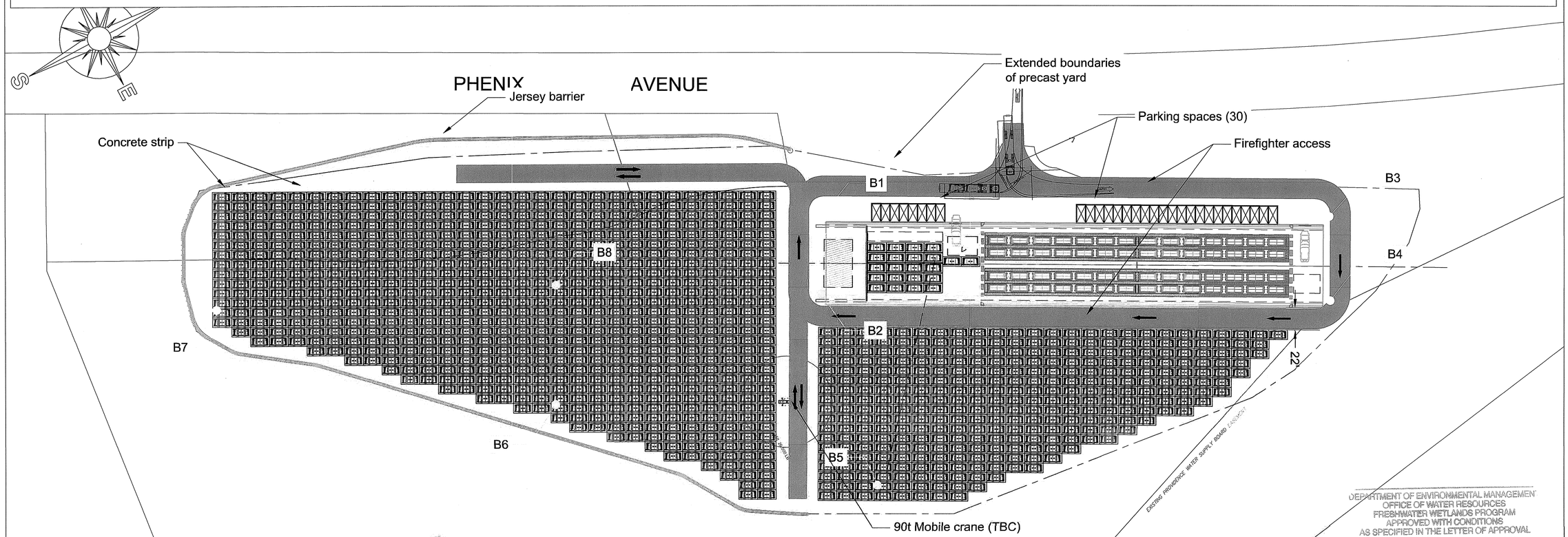

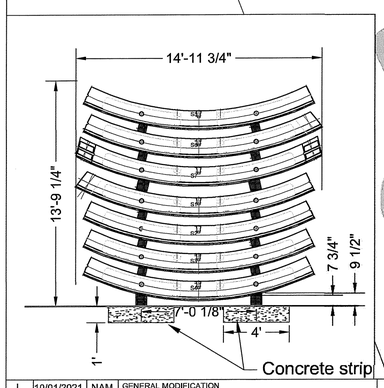

DEPARTMENT OF ENVIRONMENTAL MANAGEMENT
OFFICE OF WATER RESOURCES
FRESHWATER WETLANDS PROGRAM
APPROVED WITH CONDITIONS
AS SPECIFIED IN THE LETTER OF APPROVAL
DATED DEC 10 2021 FILE # 21-0272
NO CHANGES ALLOWED WITHOUT PRIOR APPROVAL
APPROVED PLANS MUST BE AT CONSTRUCTION SITE
Martin D. Wenczek

Environmental Management
DEC 08 2021
Office of Water Resources

Borings Coordinates		
Borings	X	Y
B1	332 479,017	247 382,619
B2	332 539,804	247 354,793
B3	332 693,481	247 834,781
B4	332 760,601	247 801,462
B5	332 708,435	247 292,086
B6	332 488,452	247 049,918
B7	332 248,174	246 799,868
B8	332 386,048	247 106,810

REV	DATE	BY	DESCRIPTION
I	10/01/2021	NAM	GENERAL MODIFICATION
H	07/15/2021	NAM	UPDATE OF SITE ARRANGEMENT AND THE EARTHWORKS
G	06/09/2021	NAM	UPDATE OF SITE ARRANGEMENT
F	06/07/2021	NAM	UPDATE OF THE TOPOGRAPHY
E	05/20/2021	CBU	GENERAL SITE ARRANGMENT WITH PLATFORM

SCALE

WARNING
0 ½ 1
IF THIS BAR DOES NOT MEASURE 1" THEN DRAWING IS NOT TO SCALE

SCALE

DESIGN BY: ESOUCHE
DRAWN BY: NAMIRA
CHECKED: SPOLYCARPE

CBNA - BARLETTA PHASE IIIA CSO JV
CB3A IN ASSOCIATION AECOM

NARRAGANSETT BAY COMMISSION
PHASE III COMBINED SEWER
OVERFLOW PROGRAM
Stantec PARE

DESIGN PHASE: METHODS
CONTRACT NO. 308.01C NBC PAWTUCKET TUNNEL
TUNNEL PRECAST SEGMENTS

SHEET TITLE: PRECAST FACTORY
GENERAL LAYOUT
CRANSTON YARD

SHEET NO. TBMPS - 802 - I
15 of 23
~~2 of 6~~

PATH/FILENAME: C:\Users\NAMIRA\BCNA\CBNA_Barletta_PhaseIIIA_Site - Documents\1_Technical Documents\06_Methods\I- TBM\TUNNEL PRECAST SEGMENTS\TBMPS-802\TBMPS-802-I\TBMPS-802-I- Precast.dwg
LAST UPDATE: 2021/10/01 - 10:44
PLOT DATE: 2021/10/01 - 2:01

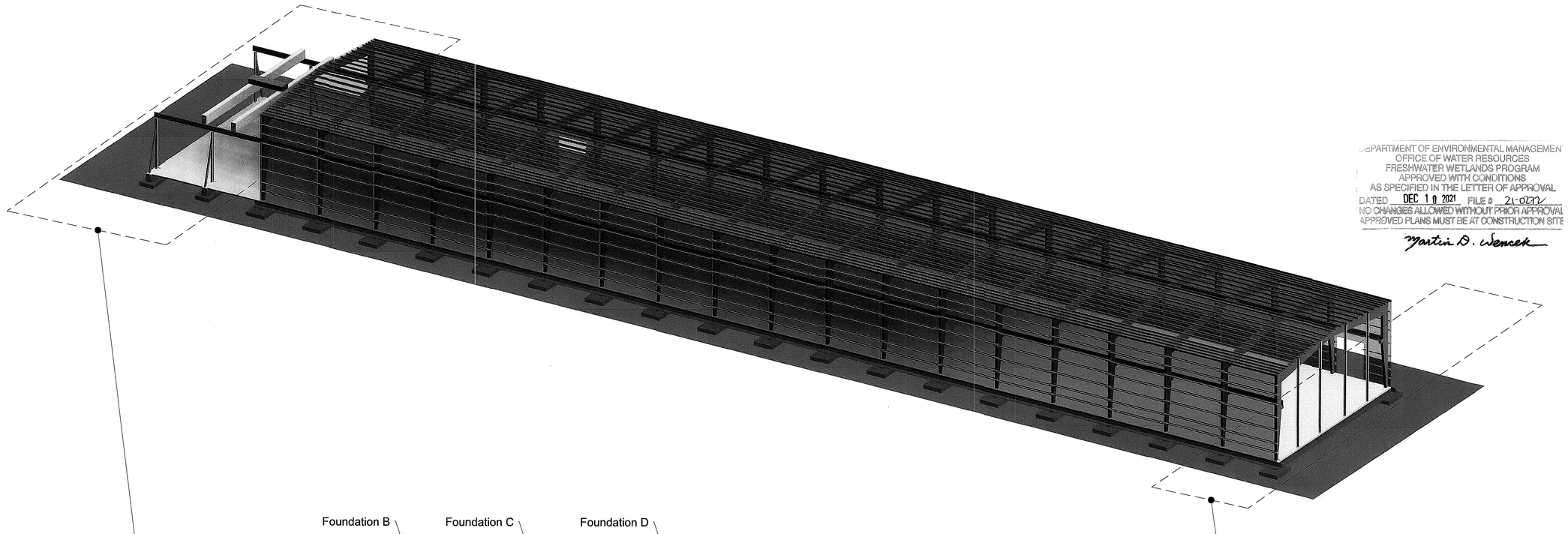

3D Detail 1

3D Detail 2

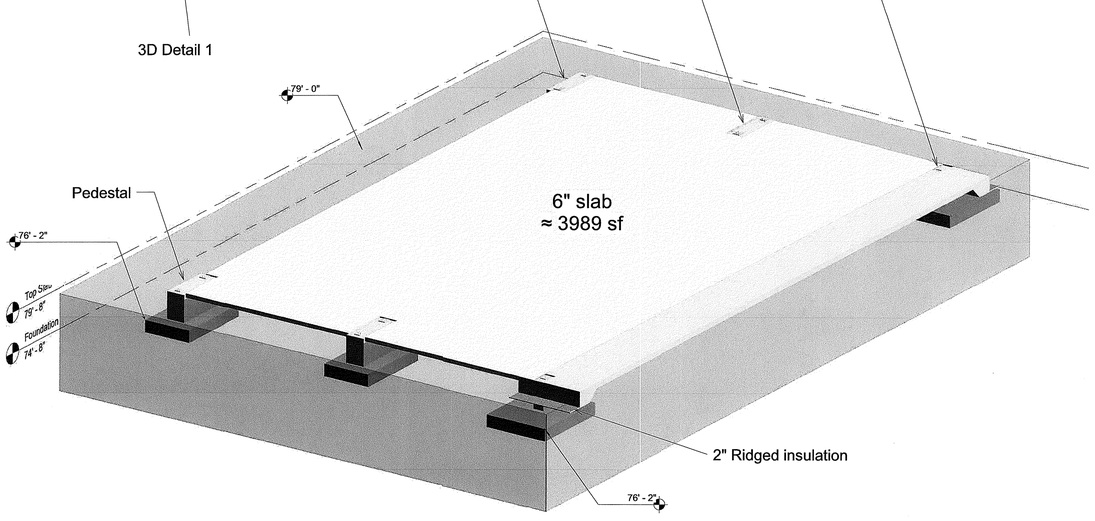

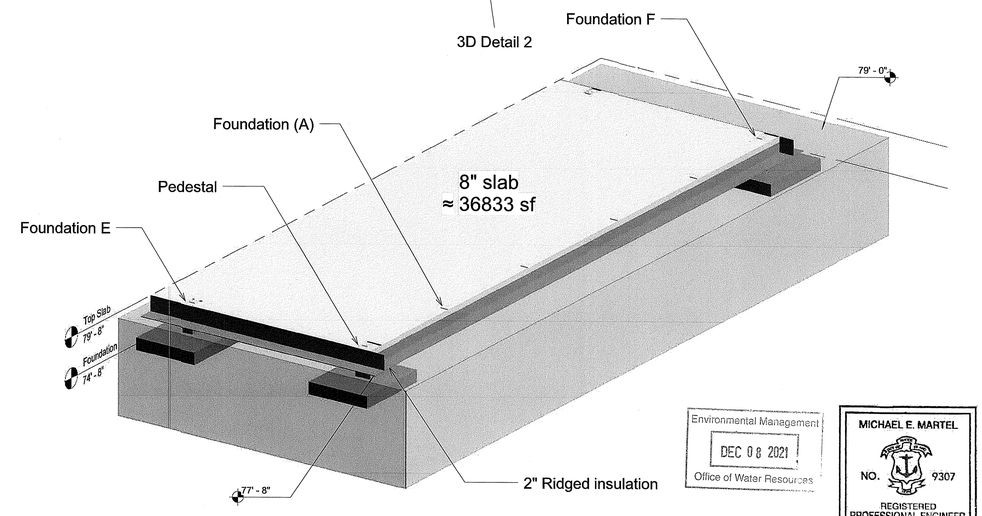

DEPARTMENT OF ENVIRONMENTAL MANAGEMENT
OFFICE OF WATER RESOURCES
FRESHWATER WETLANDS PROGRAM
APPROVED WITH CONDITIONS
AS SPECIFIED IN THE LETTER OF APPROVAL
DATED DEC 10 2021 FILE # 21-0772
NO CHANGES ALLOWED WITHOUT PRIOR APPROVAL
APPROVED PLANS MUST BE AT CONSTRUCTION SITE
Martin D. Wencek

Environmental Management
DEC 08 2021
Office of Water Resources

MICHAEL E. MARTEL
NO. 9307
REGISTERED PROFESSIONAL ENGINEER STRUCTURAL
09/03/2021

REV	DATE	BY	DESCRIPTION
B	09/03/2021	FSO	Add notes & details (p.8)
A	08/30/2021	FSO	First Issue

SCALE

WARNING
0 1/2 1
IF THIS BAR DOES NOT MEASURE 1" THEN DRAWING IS NOT TO SCALE

DESIGN BY: FSO
DRAWN BY: VFA
CHECKED: SPO

CBNA - BARLETTA PHASE IIIA CSO JV
CB3A
IN ASSOCIATION
AECOM

NARRAGANSETT BAY COMMISSION
PHASE III COMBINED SEWER OVERFLOW PROGRAM
Narragansett Bay Commission
Stantec
PARE

DESIGN PHASE	SHEET TITLE	SHEET NO.
METHODS CONTRACT NO. 308.01C NBC PAWTUCKET TUNNEL TBM PRECAST SEGMENT	TBM PRECAST SEGMENT PRECAST YARD FOUNDATION GENERAL ARRANGEMENT	TBMPS - 804 - B 16 of 23

PATH/FILENAME: C:\Users\V.Faye\BCNA\CBNA_Barletta_PhaseIIIA_Site - 06_Methods\- TBM\TUNNEL PRECAST SEGMENTS\TBMPS-804\02-Precast Building\Revit Model\PRECAST-YARD-FACTORY-A5.rvt
LAST UPDATE: 9/3/2021 9:11:06 AM
PLOT DATE: 9/3/2021 9:11:06 AM

0001

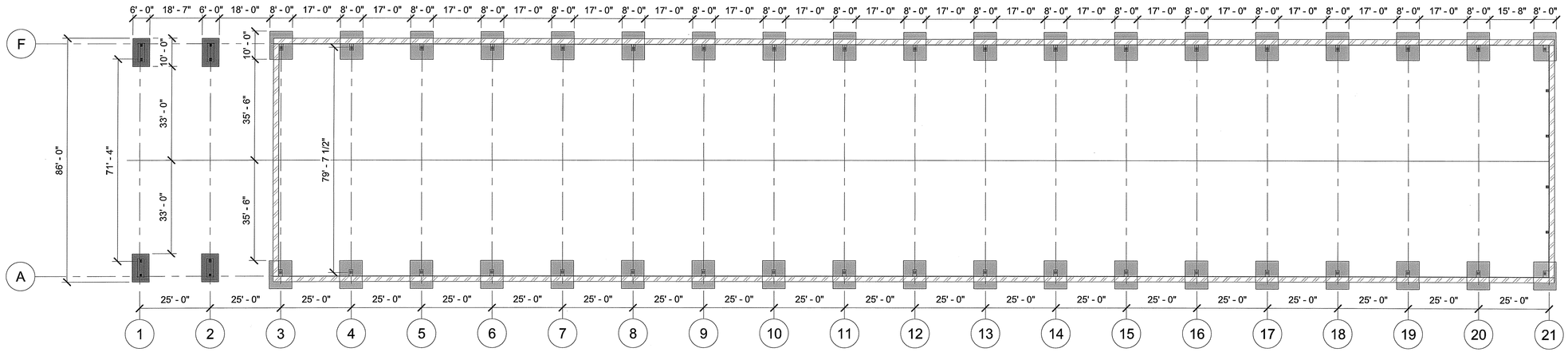

1 Foundations plan

1" = 20'-0"

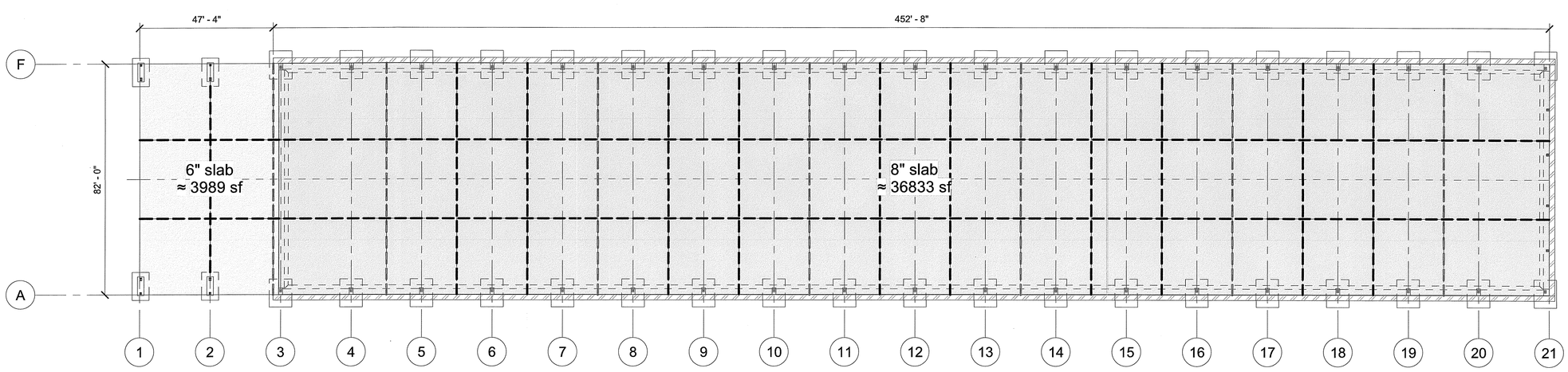

2 Slabs Plan

1" = 20'-0"

DEPARTMENT OF ENVIRONMENTAL MANAGEMENT
OFFICE OF WATER RESOURCES
FRESHWATER WETLANDS PROGRAM
APPROVED WITH CONDITIONS
AS SPECIFIED IN THE LETTER OF APPROVAL
DATED DEC 1 0 2021 FILE # 21-0272
NO CHANGES ALLOWED WITHOUT PRIOR APPROVAL
APPROVED PLANS MUST BE AT CONSTRUCTION SITE
Martin D. Wencek

Environmental Management
DEC 0 8 2021
Office of Water Resources

MICHAEL E. MARTEL
NO. 9307
REGISTERED PROFESSIONAL ENGINEER STRUCTURAL
09/03/2021

REV	DATE	BY	DESCRIPTION
B	09/03/2021	FSO	Add notes & details (p.8)
A	08/30/2021	FSO	First Issue

SCALE: As indicated

WARNING: 0 1/2 1 — IF THIS BAR DOES NOT MEASURE 1" THEN DRAWING IS NOT TO SCALE

DESIGN BY: FSO
DRAWN BY: VFA
CHECKED: SPO

CBNA - BARLETTA PHASE IIIA CSO JV
CB3A
IN ASSOCIATION
AECOM

NARRAGANSETT BAY COMMISSION
PHASE III COMBINED SEWER OVERFLOW PROGRAM
Stantec PARE

DESIGN PHASE	SHEET TITLE	SHEET NO.
METHODS	TBM PRECAST SEGMENT	TBMPS - 804 - B
CONTRACT NO. 308.01C NBC PAWTUCKET TUNNEL	PRECAST YARD FOUNDATION	17 of 23
TBM PRECAST SEGMENT	GENERAL ARRANGEMENT	

PATH/FILENAME: C:\Users\V.Faye\BCNA\CBNA_Barletta_PhaseIIIA_Site - 06_Methods\- TBM\TUNNEL PRECAST SEGMENTS\TBMPS-804\02-Precast Building\Revit\Model\PRECAST-YARD-FACTORY-A5.rvt
LAST UPDATE: 9/3/2021 9:11:09 AM
PLOT DATE: 9/3/2021 9:11:09 AM

0001

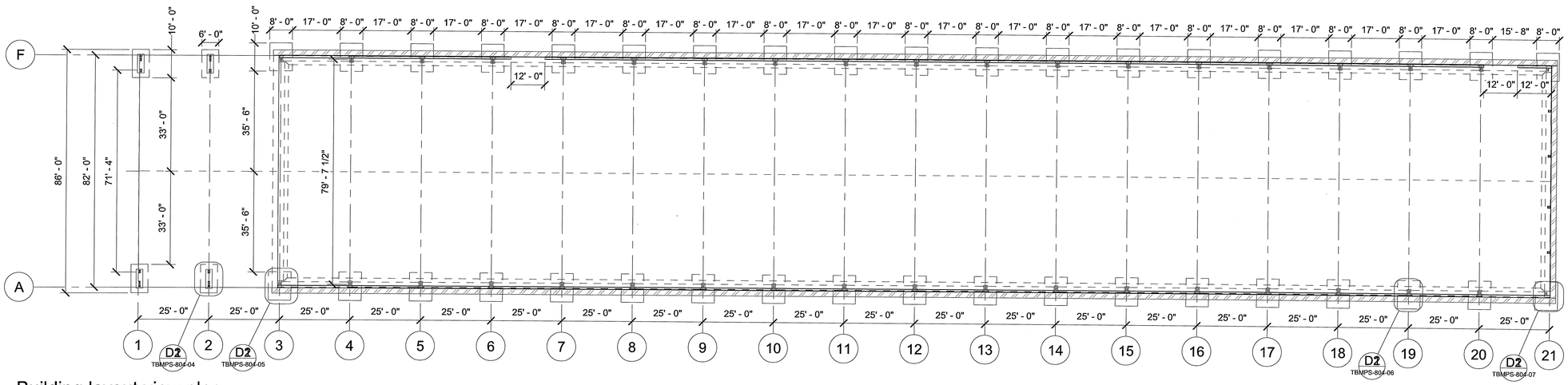

1 Building layout view plan
1" = 20'-0"

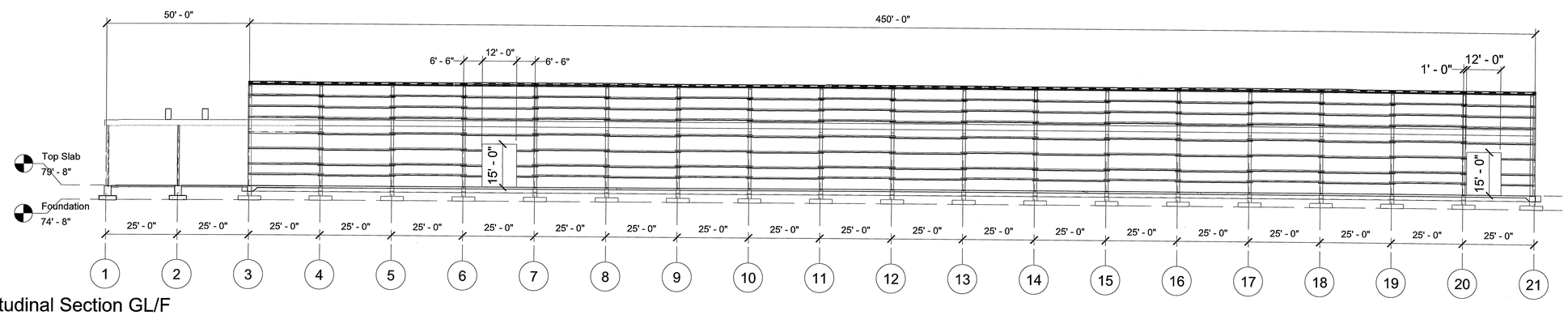

F Longitudinal Section GL/F
1" = 20'-0"

DEPARTMENT OF ENVIRONMENTAL MANAGEMENT
OFFICE OF WATER RESOURCES
FRESHWATER WETLANDS PROGRAM
APPROVED WITH CONDITIONS
AS SPECIFIED IN THE LETTER OF APPROVAL
DATED DEC 10 2021 FILE # 21-0772
NO CHANGES ALLOWED WITHOUT PRIOR APPROVAL
APPROVED PLANS MUST BE AT CONSTRUCTION SITE
Martin D. Wencek

Environmental Management
DEC 08 2021
Office of Water Resources

MICHAEL E. MARTEL
NO. 9307
REGISTERED PROFESSIONAL ENGINEER STRUCTURAL
09/03/2021

REV	DATE	BY	DESCRIPTION
B	09/03/2021	FSO	Add notes & details (p.8)
A	08/30/2021	FSO	First Issue

SCALE: 1" = 20'-0"

WARNING: 0 1/2 1 — IF THIS BAR DOES NOT MEASURE 1" THEN DRAWING IS NOT TO SCALE

DESIGN BY: FSO
DRAWN BY: VFA
CHECKED: SPO

CBNA - BARLETTA PHASE IIIA CSO JV
CB3A IN ASSOCIATION AECOM

NARRAGANSETT BAY COMMISSION
PHASE III COMBINED SEWER OVERFLOW PROGRAM
Stantec PARE

DESIGN PHASE	SHEET TITLE	SHEET NO.
METHODS CONTRACT NO. 308.01C NBC PAWTUCKET TUNNEL TBM PRECAST SEGMENT	TBM PRECAST SEGMENT PRECAST YARD FOUNDATION GENERAL ARRANGEMENT	TBMPS - 804 - B 18 of 23

PATH/FILENAME: C:\Users\V.Faye\BCNA\CBNA_Barletta_Phase\IIA_Site - 06_Methods\I- TBM\TUNNEL PRECAST SEGMENTS\TBMPS-804\02-Precast Building\Revit Model\PRECAST-YARD-FACTORY-A5.rvt
LAST UPDATE: 9/3/2021 9:11:13 AM
PLOT DATE: 9/3/2021 9:11:13 AM

0001

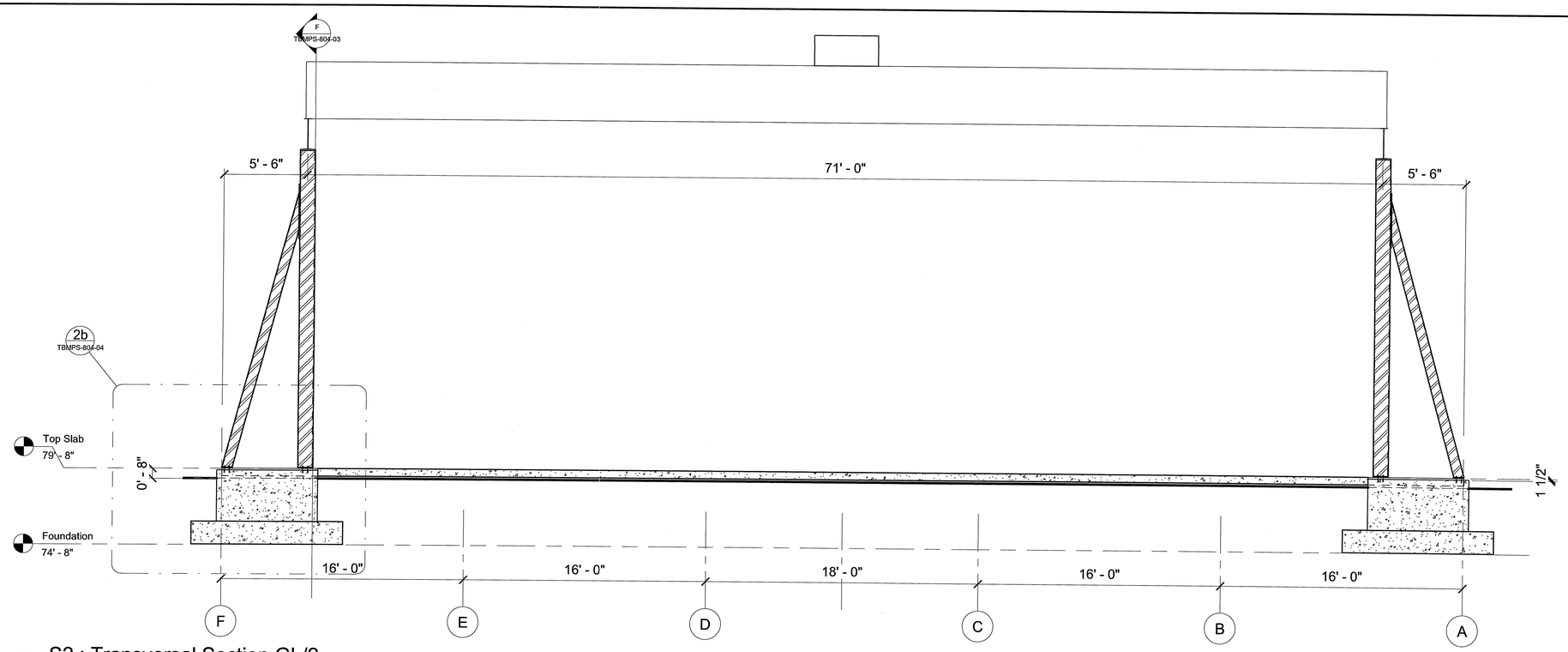

1 S2 : Transversal Section GL/2
1/4" = 1'-0"

Foundations type B and C (4 units)

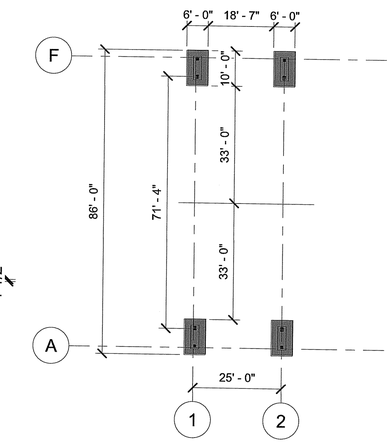

2 Foundations type B & C (4u)
1" = 20'-0"

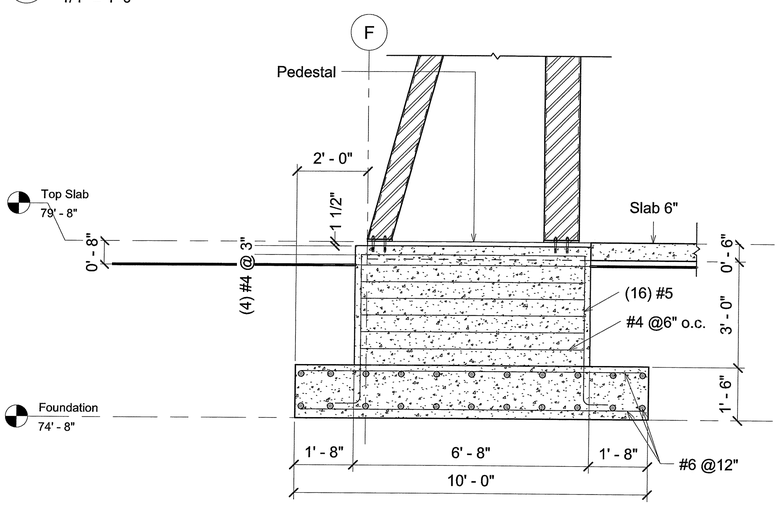

2b S2b : Foundation detail
1/2" = 1'-0"

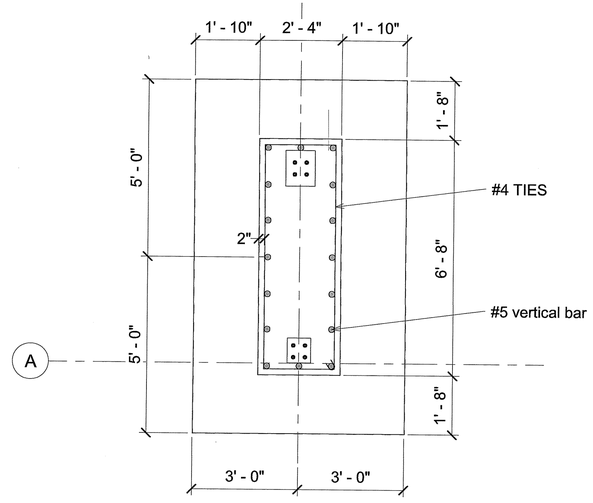

D1 D1 : Plan view detail GL/1-2
1/2" = 1'-0"

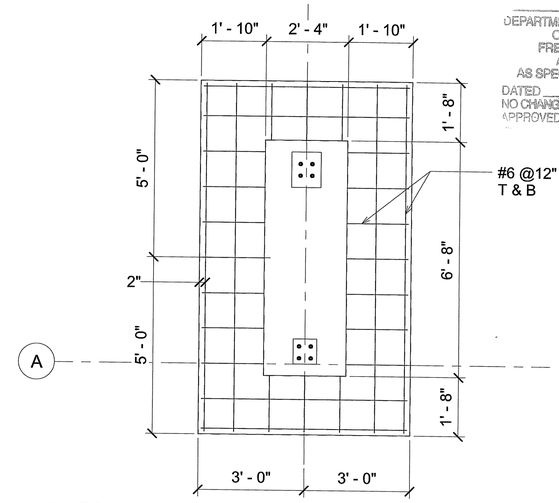

D2 D2 : Plan view detail GL/1-2
1/2" = 1'-0"

DEPARTMENT OF ENVIRONMENTAL MANAGEMENT
OFFICE OF WATER RESOURCES
FRESHWATER WETLANDS PROGRAM
APPROVED WITH CONDITIONS
AS SPECIFIED IN THE LETTER OF APPROVAL
DATED DEC 10 2021 FILE # 21-0272
NO CHANGES ALLOWED WITHOUT PRIOR APPROVAL
APPROVED PLANS MUST BE AT CONSTRUCTION SITE
Martin D. Wencek

Environmental Management
DEC 08 2021
Office of Water Resources

MICHAEL E. MARTEL
NO. 9307
REGISTERED
PROFESSIONAL ENGINEER
STRUCTURAL

09/03/2021

REV	DATE	BY	DESCRIPTION
B	09/03/2021	FSO	Add notes & details (p.8)
A	08/30/2021	FSO	First Issue

SCALE: As indicated

WARNING: 0 1/2 1 — IF THIS BAR DOES NOT MEASURE 1" THEN DRAWING IS NOT TO SCALE

DESIGN BY: FSO
DRAWN BY: VFA
CHECKED: SPO

CBNA - BARLETTA PHASE IIIA CSO JV
CB3A IN ASSOCIATION AECOM

NARRAGANSETT BAY COMMISSION
PHASE III COMBINED SEWER OVERFLOW PROGRAM
Stantec PARE

DESIGN PHASE	SHEET TITLE	SHEET NO.
METHODS CONTRACT NO. 308.01C NBC PAWTUCKET TUNNEL TBM PRECAST SEGMENT	TBM PRECAST SEGMENT PRECAST YARD FOUNDATION GENERAL ARRANGEMENT	TBMPS - 804 - B 19 of 23

PATH/FILENAME: C:\Users\V.Faye\BCNA\CBNA_Barletta_Phase\IIA_Site - 06_Methods\I- TBM\TUNNEL PRECAST SEGMENTS\TBMPS-804\02-Precast Building\Revit\ Model\PRECAST-YARD-FACTORY-A5.rvt
LAST UPDATE: 9/3/2021 9:11:14 AM
PLOT DATE: 9/3/2021 9:11:14 AM

0001

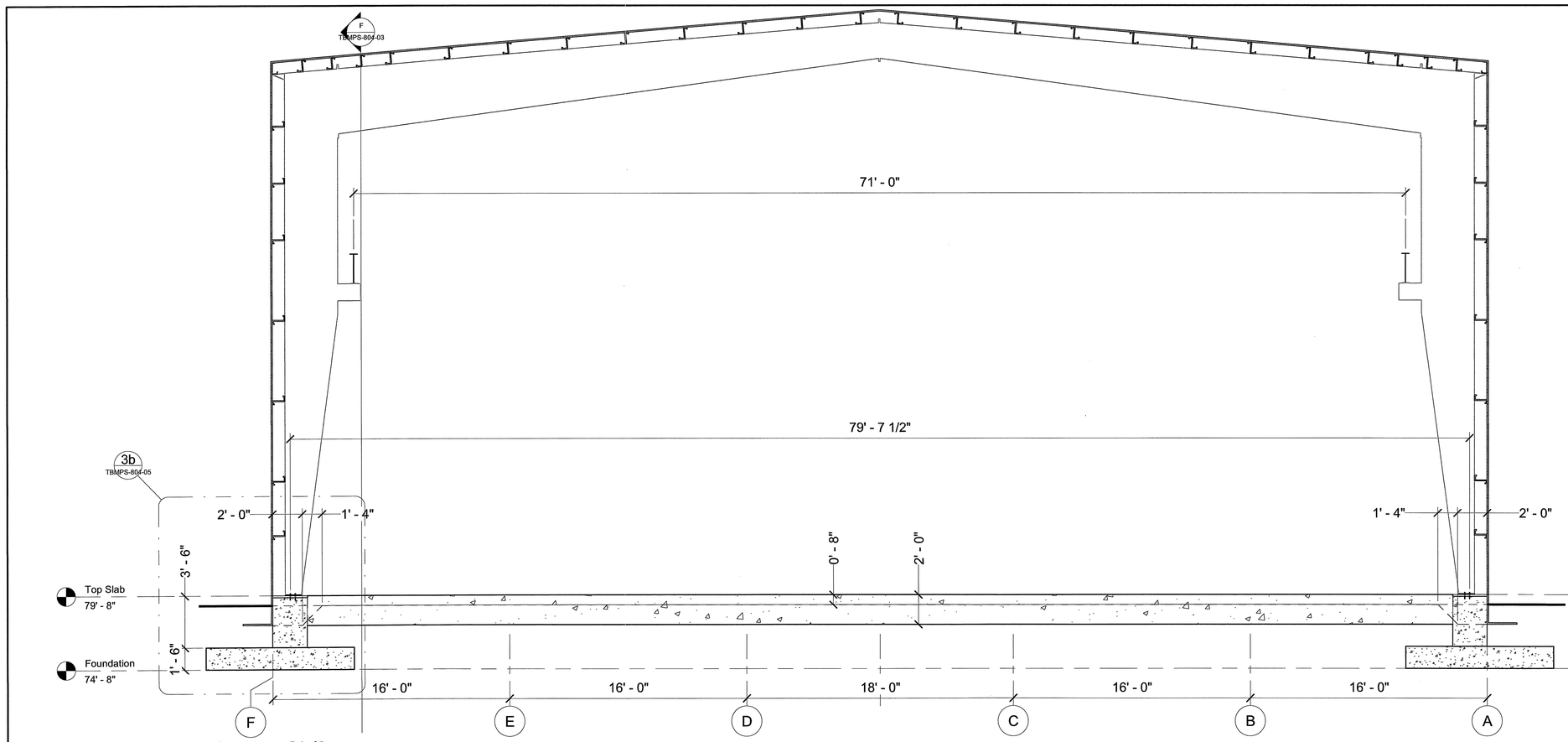

1 S3 : Transversal Section GL/3
1/4" = 1'-0"

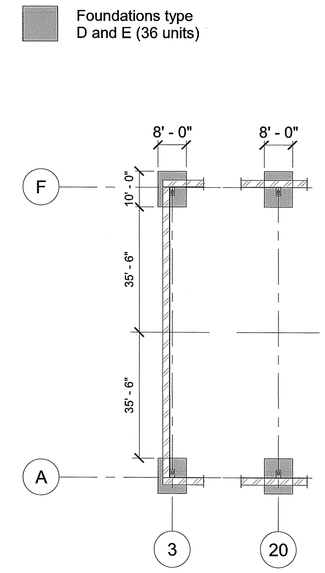

2 Foundations type D & E (36u)
1" = 20'-0"

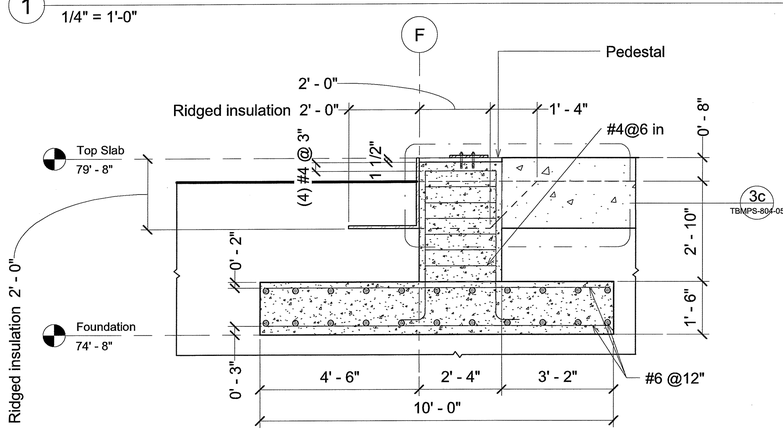

3b S3b : Foundation detail
1/2" = 1'-0"

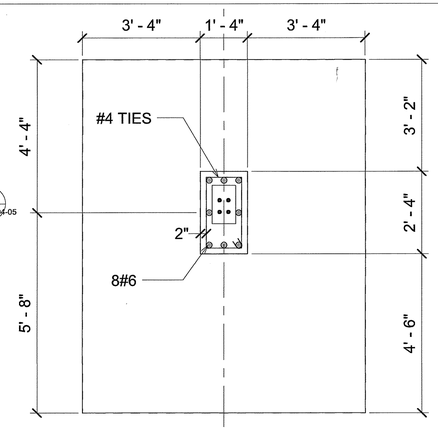

D1 D1 : Plan view detail GL/3-20
1/2" = 1'-0"

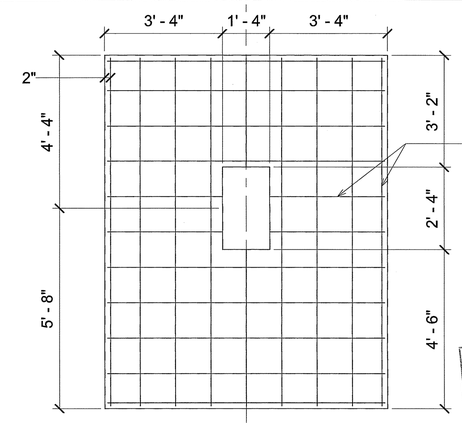

D2 D2 : Plan view detail GL/3-20
1/2" = 1'-0"

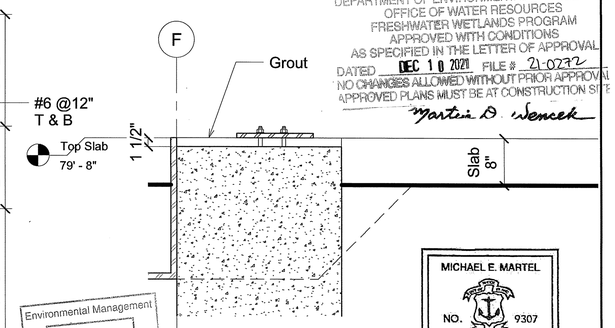

3c S3c : Hanched Slab details
1" = 1'-0"

DEPARTMENT OF ENVIRONMENTAL MANAGEMENT
OFFICE OF WATER RESOURCES
FRESHWATER WETLANDS PROGRAM
APPROVED WITH CONDITIONS
AS SPECIFIED IN THE LETTER OF APPROVAL
DATED DEC 10 2021 FILE # 21-0272
NO CHANGES ALLOWED WITHOUT PRIOR APPROVAL
APPROVED PLANS MUST BE AT CONSTRUCTION SITE
Martin D. Wencek

Environmental Management
DEC 08 2021
Office of Water Resources

MICHAEL E. MARTEL
NO. 9307
REGISTERED PROFESSIONAL ENGINEER STRUCTURAL
09/03/2021

REV	DATE	BY	DESCRIPTION
B	09/03/2021	FSO	Add notes & details (p.8)
A	08/30/2021	FSO	First Issue

SCALE: As indicated

WARNING: 0 1/2 1 — IF THIS BAR DOES NOT MEASURE 1" THEN DRAWING IS NOT TO SCALE

DESIGN BY: FSO
DRAWN BY: VFA
CHECKED: SPO

CBNA - BARLETTA PHASE IIIA CSO JV
CB3A
IN ASSOCIATION
AECOM

NARRAGANSETT BAY COMMISSION
PHASE III COMBINED SEWER OVERFLOW PROGRAM
Stantec
PARE

DESIGN PHASE	SHEET TITLE	SHEET NO.
METHODS CONTRACT NO. 308.01C NBC PAWTUCKET TUNNEL TBM PRECAST SEGMENT	TBM PRECAST SEGMENT PRECAST YARD FOUNDATION GENERAL ARRANGEMENT	TBMPS - 804 - B 20 of 23 ~~5 of 8~~

PATH/FILENAME: C:\Users\V.Faye\BCNA\CBNA_Barletta_Phase\IIIA_Site - 06_Methods\I- TBM\TUNNEL PRECAST SEGMENTS\TBMPS-804\02-Precast Building\Revit Model\PRECAST-YARD-FACTORY-A5.rvt
LAST UPDATE: 9/3/2021 9:11:15 AM
PLOT DATE: 9/3/2021 9:11:15 AM

0001

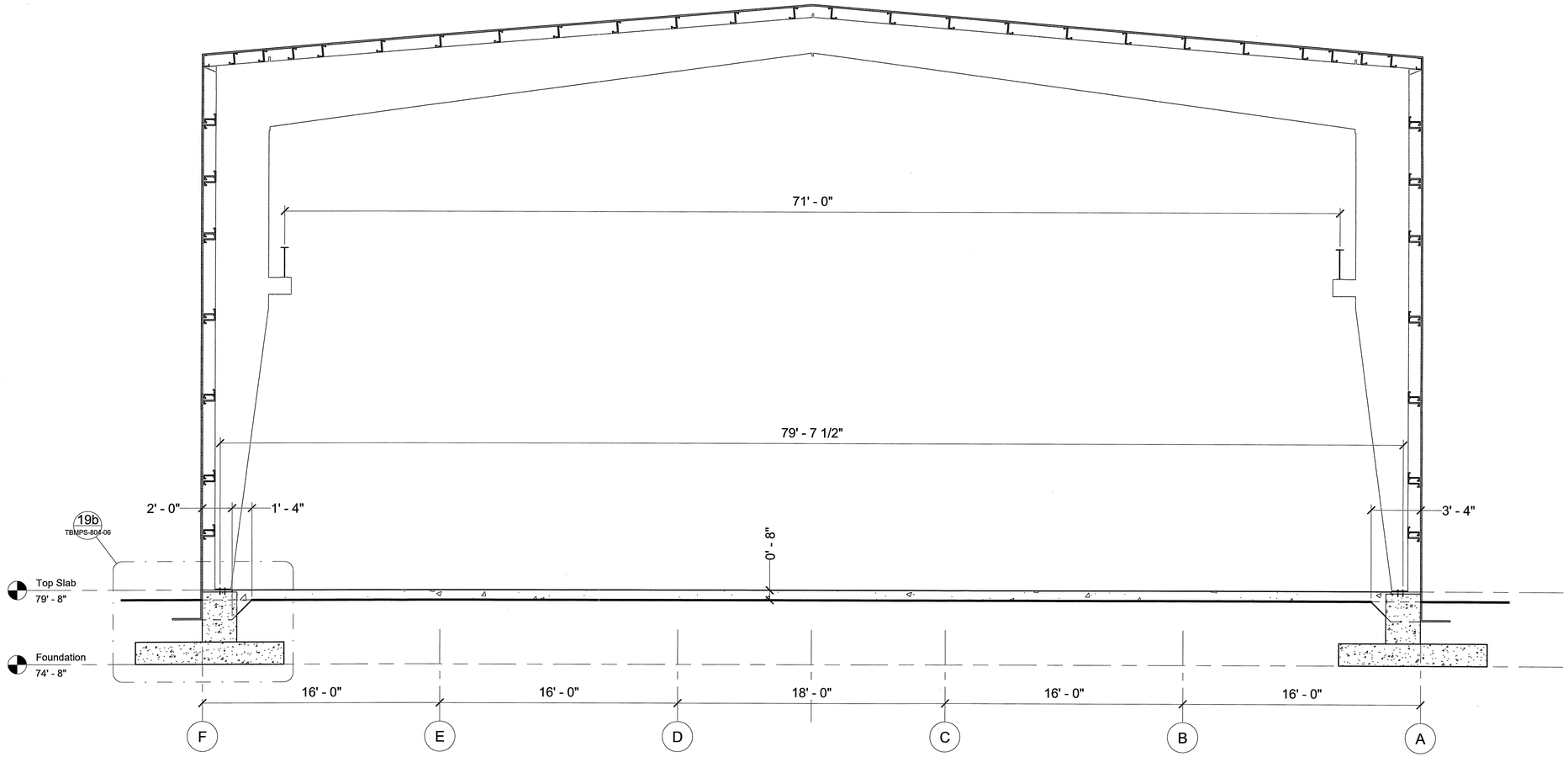

1 Transversal Section GL19
1/4" = 1'-0"

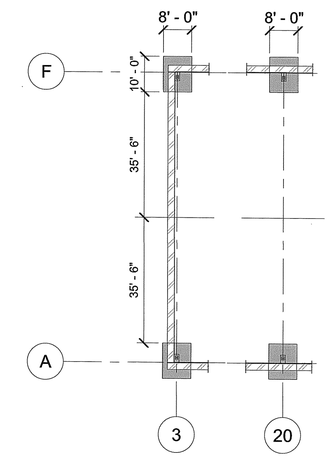

2 Foundations type D & E (36u)
1" = 20'-0"

DEPARTMENT OF ENVIRONMENTAL MANAGEMENT
OFFICE OF WATER RESOURCES
FRESHWATER WETLANDS PROGRAM
APPROVED WITH CONDITIONS
AS SPECIFIED IN THE LETTER OF APPROVAL
DATED DEC 1 0 2021 FILE # 21-0272
NO CHANGES ALLOWED WITHOUT PRIOR APPROVAL
APPROVED PLANS MUST BE AT CONSTRUCTION SITE
Martin D. Wenck

Foundations type
D and E (36 units)

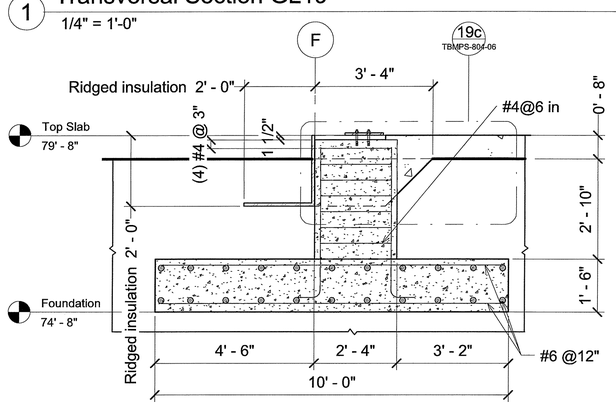

19b S19b : Foundation detail
1/2" = 1'-0"

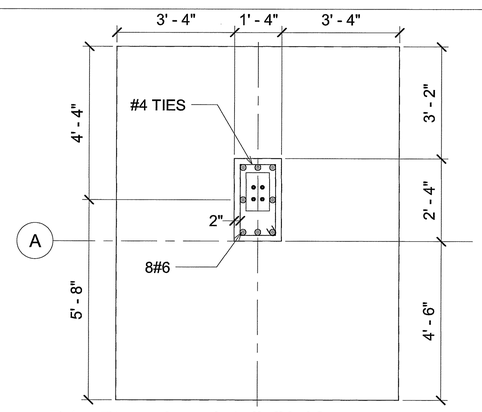

D1 D1 : Plan view detail GL19
1/2" = 1'-0"

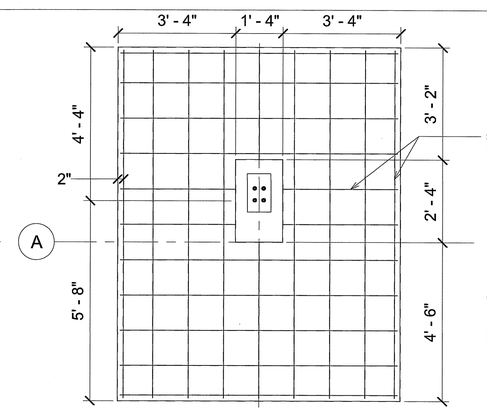

D2 D2 : Plan view detail GL19
1/2" = 1'-0"

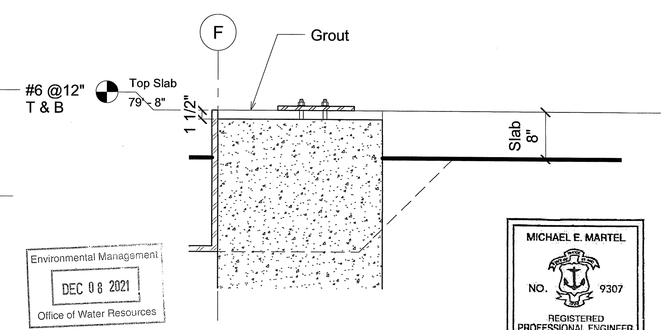

19c S19c : Hanched Slab details
1" = 1'-0"

Environmental Management
DEC 0 8 2021
Office of Water Resources

MICHAEL E. MARTEL
NO. 9307
REGISTERED
PROFESSIONAL ENGINEER
STRUCTURAL
09/03/2021

REV	DATE	BY	DESCRIPTION
B	09/03/2021	FSO	Add notes & details (p.8)
A	08/30/2021	FSO	First Issue

SCALE: As indicated

WARNING: 0 1/2 1 — IF THIS BAR DOES NOT MEASURE 1" THEN DRAWING IS NOT TO SCALE

DESIGN BY: FSO
DRAWN BY: VFA
CHECKED: SPO

CBNA - BARLETTA PHASE IIIA CSO JV
CB3A IN ASSOCIATION AECOM

NARRAGANSETT BAY COMMISSION
PHASE III COMBINED SEWER
OVERFLOW PROGRAM
Stantec PARE

DESIGN PHASE	SHEET TITLE	SHEET NO.
METHODS CONTRACT NO. 308.01C NBC PAWTUCKET TUNNEL TBM PRECAST SEGMENT	TBM PRECAST SEGMENT PRECAST YARD FOUNDATION GENERAL ARRANGEMENT	TBMPS - 804 - B 21 of 23 ~~6 of 8~~

PATH/FILENAME: C:\Users\V.Faye\BCNA\CBNA_Barletta_PhaseIIIA_Site - 06_Methods\1- TBM\TUNNEL PRECAST SEGMENTS\TBMPS-804\02-Precast Building\Revit\Model\PRECAST-YARD-FACTORY-A5.rvt
LAST UPDATE: 9/3/2021 9:11:16 AM
PLOT DATE: 9/3/2021 9:11:16 AM

0001

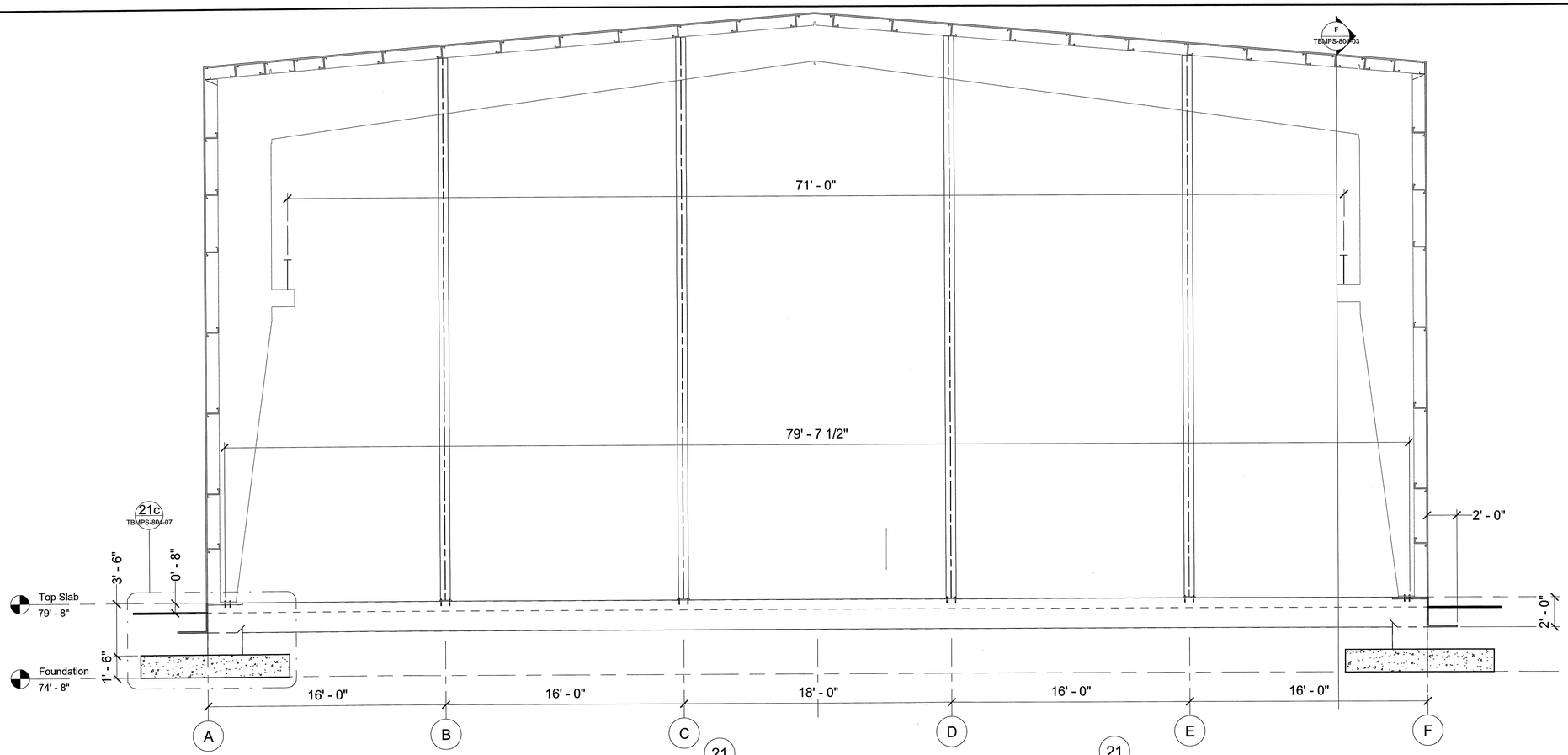

21b S21b : Transversal Section G21

1/4" = 1'-0"

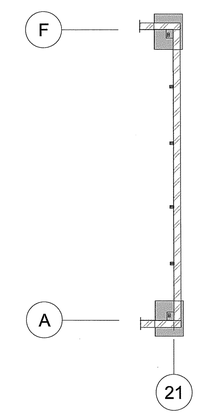

1 Foundations type F & A

1" = 20'-0"

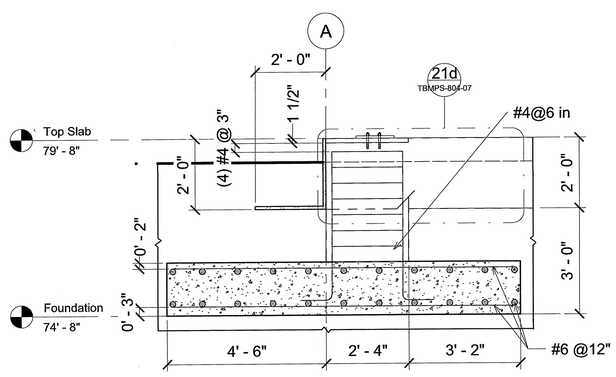

21c S21c : Foundation detail

1/2" = 1'-0"

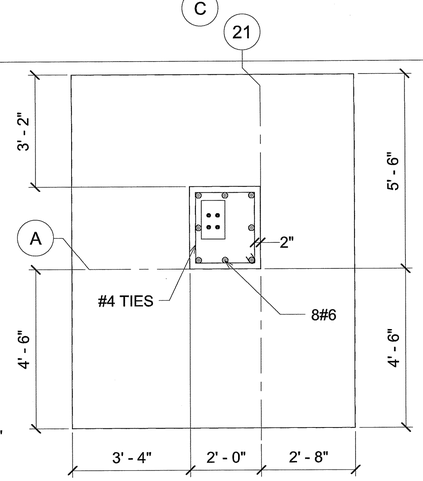

D1 D1 : Plan view detail GL21

1/2" = 1'-0"

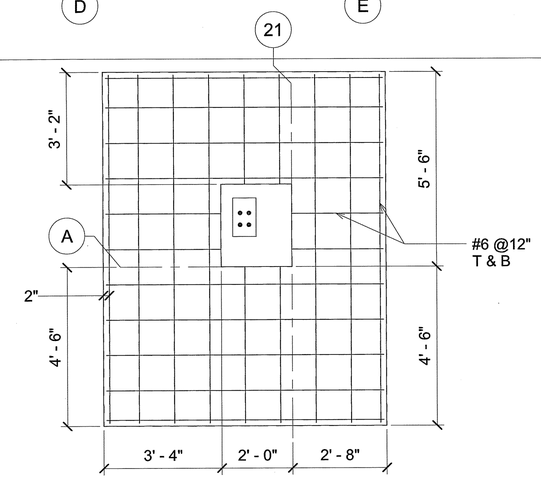

D2 D2 : Plan view detail GL21

1/2" = 1'-0"

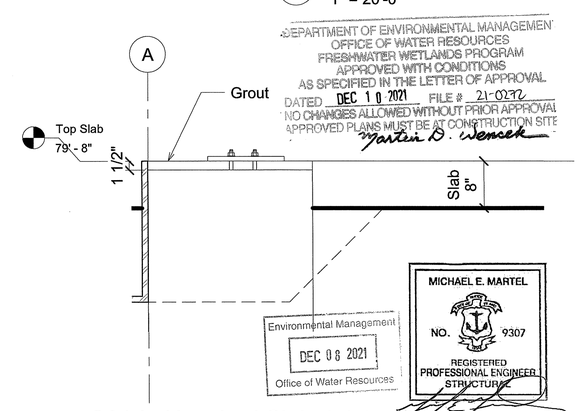

DEPARTMENT OF ENVIRONMENTAL MANAGEMENT
OFFICE OF WATER RESOURCES
FRESHWATER WETLANDS PROGRAM
APPROVED WITH CONDITIONS
AS SPECIFIED IN THE LETTER OF APPROVAL
DATED DEC 10 2021 FILE # 21-0272
NO CHANGES ALLOWED WITHOUT PRIOR APPROVAL
APPROVED PLANS MUST BE AT CONSTRUCTION SITE
Karen D. Wemek

Environmental Management
DEC 08 2021
Office of Water Resources

MICHAEL E. MARTEL
NO. 9307
REGISTERED
PROFESSIONAL ENGINEER
STRUCTURAL

09/03/2021

21d S21d : Hanched Slab details

1" = 1'-0"

REV	DATE	BY	DESCRIPTION
B	09/03/2021	FSO	Add notes & details (p.8)
A	08/30/2021	FSO	First Issue

SCALE: As indicated

WARNING: 0 1/2 1 — IF THIS BAR DOES NOT MEASURE 1" THEN DRAWING IS NOT TO SCALE

DESIGN BY: FSO
DRAWN BY: VFA
CHECKED: SPO

CBNA - BARLETTA PHASE IIIA CSO JV
CB3A
IN ASSOCIATION
AECOM

NARRAGANSETT BAY COMMISSION
PHASE III COMBINED SEWER OVERFLOW PROGRAM
Narragansett Bay Commission
Stantec
PARE

DESIGN PHASE	SHEET TITLE	SHEET NO.
METHODS CONTRACT NO. 308.01C NBC PAWTUCKET TUNNEL TBM PRECAST SEGMENT	TBM PRECAST SEGMENT PRECAST YARD FOUNDATION GENERAL ARRANGEMENT	TBMPS - 804 - B 22 of 23 2 of 8

PATH/FILENAME: C:\Users\V.Faye\BCNA\CBNA_Barletta_PhaseIIIA_Site - 06_Methods\- TBM\TUNNEL PRECAST SEGMENTS\TBMPS-804\02-Precast Building\Revit\Model\PRECAST-YARD-FACTORY-A5.rvt
LAST UPDATE: 9/3/2021 9:11:17 AM
PLOT DATE: 9/3/2021 9:11:17 AM

0001

NOTES

1. THE MINIMUM COVER FOR REINFORCEMENT SHALL BE AS SHOWN BELOW, UNLESS NOTED OTHERWISE:

BOTTOM OF SLAB & FOOTING (CAST DIRECTLY AGAINST ROCK/EARTH) 3"
TOP OF SLAB 2"
FORMED CONCRETE 2"

2. MATERIALS

CAST-IN-SITU CONCRETE & PRECAST CONCRETE f'c = 3000 psi
GROUTING SHALL BE 5000 psi

3. REINFORCING STEEL

ASTM A615, GRADE 60 OR ASTM A706: fy = 60,000 psi

4. REINFORCING STEEL TENSION DEVELOPMENT AND SPLICE LENGTHS

REINFORCING STEEL TENSION DEVELOPMENT AND SPLICE LENGTHS
Ld= TENSION DEVELOPMENT LENGTH
Ls= TENSION LAP SPLICE LENGTH

BAR SIZES	DEVELOPMENT AND LAP LENGTHS	CONCRETE COVER = 1.5 IN		CONCRETE COVER = 2 IN		CONCRETE COVER = 3 IN	
		TOP	OTHER	TOP	OTHER	TOP	OTHER
#4	Ld	1'-3"	1'-0"	1'-3"	1'-0"	1'-3"	1'-0"
	Ls	1'-8"	1'-4"	1'-8"	1'-4"	1'-8"	1'-4"
#5	Ld	1'-7"	1'-3"	1'-7"	1'-3"	1'-7"	1'-3"
	Ls	2'-1"	1'-7"	2'-1"	1'-7"	2'-1"	1'-7"
#6	Ld	1'-11"	1'-6"	1'-11"	1'-6"	1'-11"	1'-6"
	Ls	2'-5"	1'-11"	2'-5"	1'-11"	2'-5"	1'-11"

5. SHOP DRAWING AND BAR BENDING SCHEDULES BE REVIEWED AND APPROVED BY CB3A

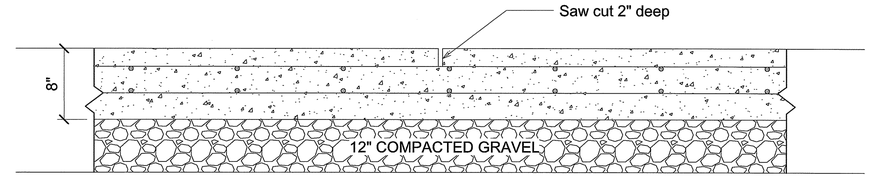

SLAB CONSTRUCTION JOINT
1 1/2" = 1'-0"

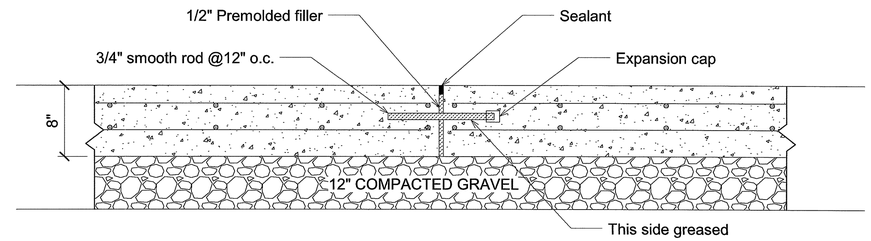

SLAB EXPANSION JOINT
1 1/2" = 1'-0"

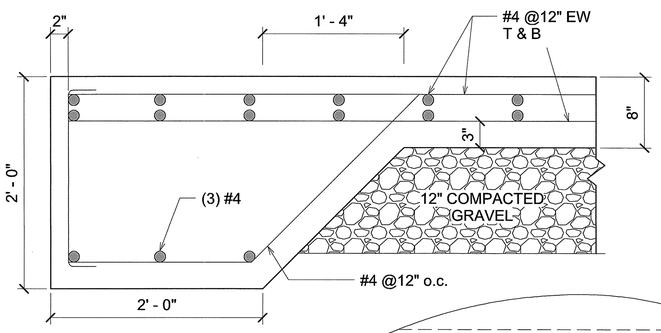

HENCH SLAB
1 1/2" = 1'-0"

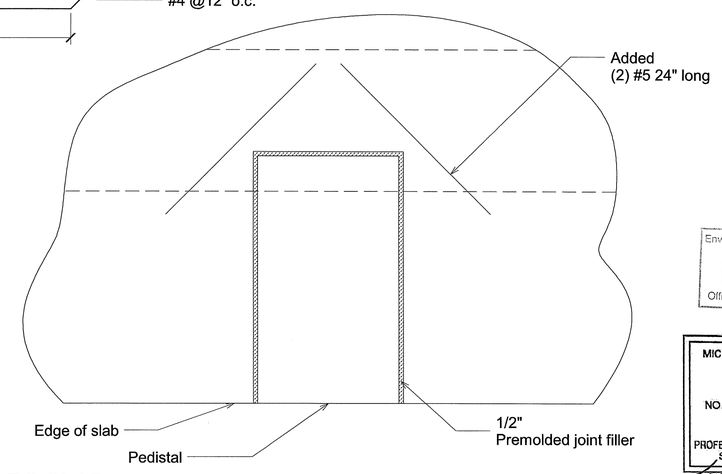

PEDISTAL REBARS SLAB
1 1/2" = 1'-0"

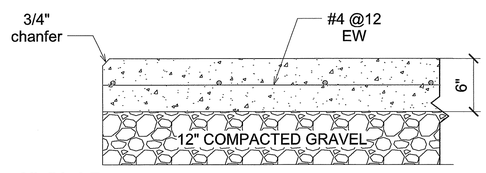

6" SLAB
1 1/2" = 1'-0"

DEPARTMENT OF ENVIRONMENTAL MANAGEMENT
OFFICE OF WATER RESOURCES
FRESHWATER WETLANDS PROGRAM
APPROVED WITH CONDITIONS
AS SPECIFIED IN THE LETTER OF APPROVAL
DATED DEC 1 0 2021 FILE # 21-0272
NO CHANGES ALLOWED WITHOUT PRIOR APPROVAL
APPROVED PLANS MUST BE AT CONSTRUCTION SITE
Martin D. Wenzel

Environmental Management
DEC 0 8 2021
Office of Water Resources

MICHAEL E. MARTEL
NO. 9307
REGISTERED PROFESSIONAL ENGINEER STRUCTURAL
09/03/2021

REV	DATE	BY	DESCRIPTION
B	09/03/2021	FSO	Add notes & details (p.8)
A	08/30/2021	FSO	First Issue

SCALE: 1 1/2" = 1'-0"
WARNING: 0 1/2 1 — IF THIS BAR DOES NOT MEASURE 1" THEN DRAWING IS NOT TO SCALE
DESIGN BY: FSO
DRAWN BY: VFA
CHECKED: SPO

CBNA - BARLETTA PHASE IIIA CSO JV
CB3A IN ASSOCIATION AECOM
NARRAGANSETT BAY COMMISSION
PHASE III COMBINED SEWER OVERFLOW PROGRAM
Narragansett Bay Commission
Stantec PARE

DESIGN PHASE	SHEET TITLE	SHEET NO.
METHODS CONTRACT NO. 308.01C NBC PAWTUCKET TUNNEL TBM PRECAST SEGMENT	TBM PRECAST SEGMENT PRECAST YARD FOUNDATION GENERAL ARRANGEMENT	TBMPS - 804 - B 23 of 23

PATH/FILENAME: C:\Users\V.Faye\BCNA\CBNA_Barletta_PhaseIIIA_Site - 06_Methods\4- TBM/TUNNEL PRECAST SEGMENTS\TBMPS-804\02-Precast Building\Revit Model\PRECAST-YARD-FACTORY-A5.rvt
LAST UPDATE: 9/3/2021 9:11:17 AM
PLOT DATE: 9/3/2021 9:11:17 AM

0001