DEVELOPMENT PLAN REVIEW
FOR
COMMERCIAL DEVELOPMENT
0 HIGH POINT AVENUE
A.P. 38 LOT 19

IN

PORTSMOUTH, RHODE ISLAND

OWNER/APPLICANT:
SPACE–PORT LLC
334 KNIGHT STREET, SUITE 11201
WARWICK, RI 02886–1283

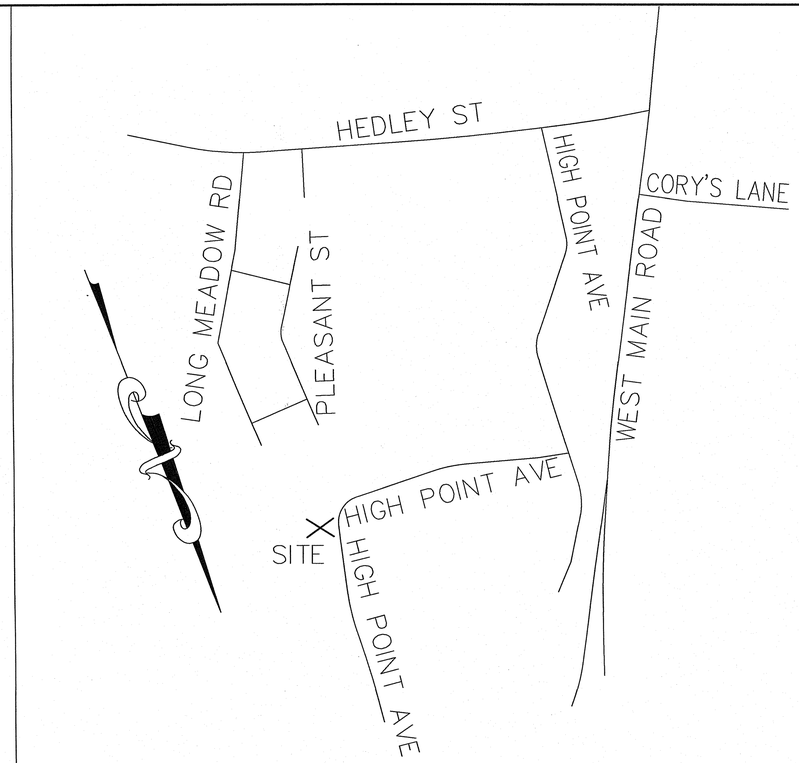

LOCUS MAP
NOT TO SCALE

RI DEPARTMENT OF ENVIRONMENTAL MANAGEMENT
OFFICE OF WATER RESOURCES
FRESHWATER WETLANDS PROGRAM
APPROVED WITH CONDITIONS AS
SPECIFIED IN THE LETTER OF APPROVAL
DATED: NOV 29 2023 FILE #: 22-0349
NO CHANGES ALLOWED WITHOUT PRIOR APPROVAL
APPROVED PLANS MUST BE AT CONSTRUCTION SITE
Martin A. Seneck

RI DEPARTMENT OF ENVIRONMENTAL MANAGEMENT
OFFICE OF WATER RESOURCES
FRESHWATER WETLANDS PROGRAM
NOTE PER DEM:
Kindly be advised that this Permit is not equivalent to a verification of the type or extent of freshwater wetlands on site

PRINCIPE COMPANY
ESTABLISHED IN 1981

PREPARED BY:
PRINCIPE COMPANY, INC.
ENGINEERING DIVISION
27 SAKONNET RIDGE DRIVE
TIVERTON, RHODE ISLAND 02878
401.816.5385
WWW.PRINCIPECOMPANY.COM

AUGUST 19, 2022
REVISED MAY 25, 2023
REVISED SEPTEMBER 18, 2023

STREET INDEX
HIGH POINT AVENUE
(PUBLIC– TOWN)

WEST MAIN ROAD
(PUBLIC– STATE HIGHWAY)

ZONING DESIGNATION:

ZONING DISTRICT: I–L

MINIMUM LOT AREA	40,000 SQ. FT.
MINIMUM LOT FRONTAGE	200'
FRONT YARD SETBACK	60'
MINIMUM SIDE YARD SETBACK	30'
MINIMUM REAR YARD SETBACK	50'
MAXIMUM BUILDING COVERAGE	25%
MAXIMUM BUILDING HEIGHT	35'

PROJECT DATA:
PLAT: 38 LOT: 19
LOT AREA : 103,237 SF, 2.37 ACRES

EXISTING:
EXISTING BUILDING COVERAGE: 0 %
TOTAL EXISTING IMPERVIOUS COVERAGE: 0 %

PROPOSED:
PROPOSED COMMERCIAL FOOTPRINT: 15,680 SF FLOOR AREA
PROPOSED BUILDING COVERAGE: 15.19% < 25%
PROPOSED IMPERVIOUS COVERAGE: 33.21% TOTAL PROPOSED

LIST OF DRAWINGS

1) TITLE SHEET
2) EXISTING CONDITIONS PLAN
3) SITE LAYOUT PLAN
4) GRADING & UTILITY PLAN
5) SEDIMENT & EROSION CONTROL PLAN
6) CONSTRUCTION DETAILS – 1
7) CONSTRUCTION DETAILS – 2

DRAWING ISSUE:
- ☐ CONCEPT
- ☐ CUSTOMER APPROVAL
- ☒ PERMITTING
- ☐ CONSTRUCTION
- ☐ AS–BUILT
- ☐ OTHER:

ONLY PLANS ISSUED FOR CONTRUCTION SHALL BE USED FOR CONSTRUCTION

Thomas J. Principe, III
No. 3107
RI, NC
REGISTERED PROFESSIONAL ENGINEER

VCC=VERTICAL CONCRETE CURB
F.G.=FINISHED GRADE
F.F.=FINISHED FLOOR
T.O.C.=TOP OF CURB
B.O.C.=BOTTOM OF CURB
R&D=REMOVE & DISPOSE
R&R=REMOVE & REPLACE
R=X'=CURB/PAVEMENT RADIUS
DS=DOWNSPOUT

PLAN SET LEGEND

	EXISTING	PROPOSED
PERIMETER LINE		
ABUTTER LINE		
ROADWAY STATION	2+00	
FENCE (CHAINLINK)	—X—X—X—X—	
FENCE (WOOD)		
EASEMENT		
CONTOUR	122	122
SURVEY BOUND		
UTILITY POLE		
SIGN		
SAWCUT		
LIGHT POLE		
OVERHEAD WIRE	OHW	OHW
CATCH BASIN		
DRAIN MANHOLE	D	D
DRAINLINE	D D	D D
WATERLINE	W W	W W
WATER GATE VALVE	W	
SEWER MANHOLE	S	S
SEWERLINE	S S	S S
GAS LINE	G G	G G
GAS VALVE	GV	
EROSION CONTROL		

RI Environmental Management
OCT 02 2023
Office of Water Resources

C:\Users\admin\Principe Engineering Projects_Land Development\2022\LT-2022-9_0 High Point Avenue_Portsmouth_Eve_conceptual_Larry Phillips\Working Drawings and PDFs\22-2022-09_High Point Ave_Portsmouth DPR-REV09 823.dwg, DWG To PDF.pc3

STREET INDEX

HIGH POINT AVENUE
(PUBLIC– TOWN)

WEST MAIN ROAD
(PUBLIC– STATE HIGHWAY)

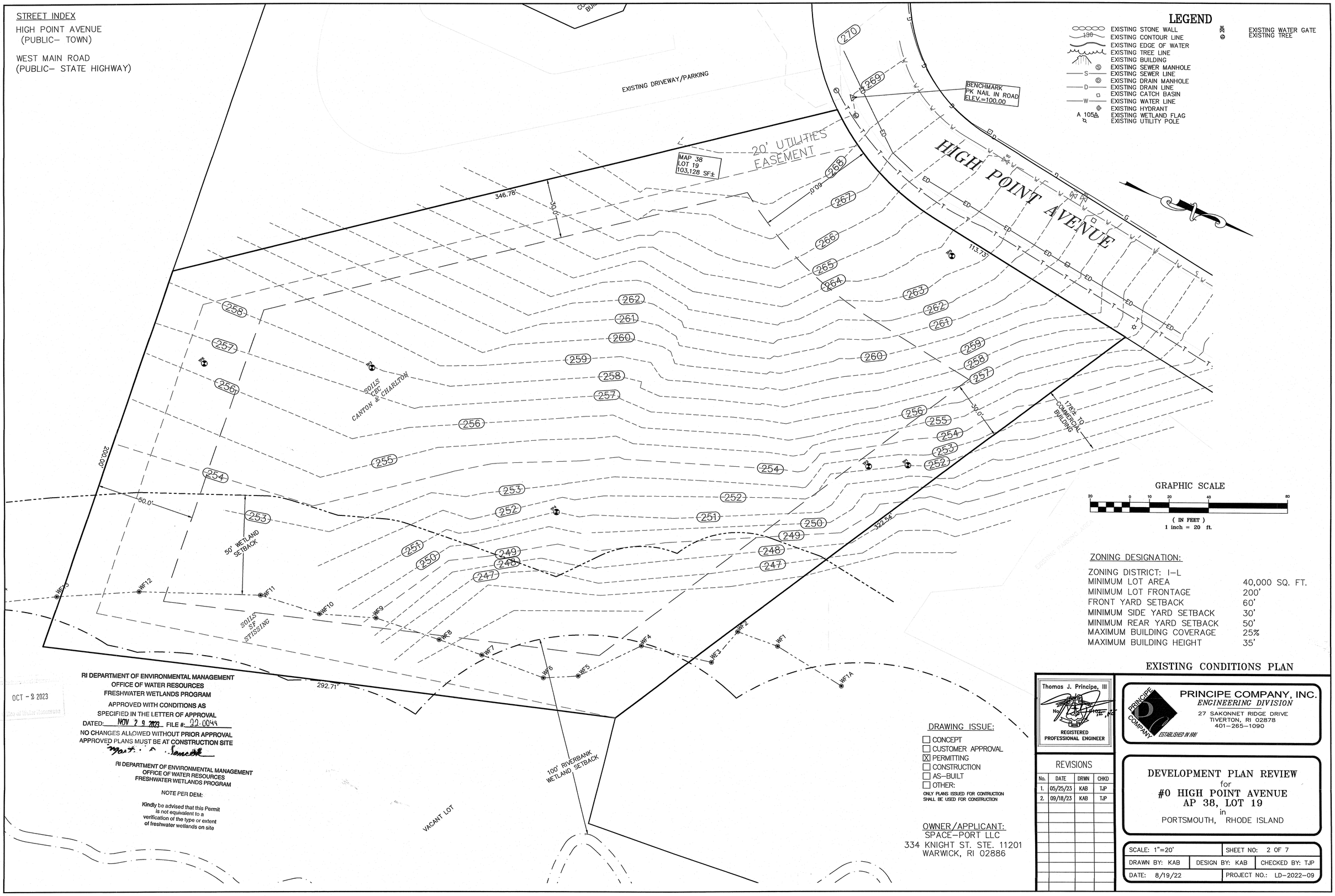

LEGEND

- EXISTING STONE WALL
- 130 EXISTING CONTOUR LINE
- EXISTING EDGE OF WATER
- EXISTING TREE LINE
- EXISTING BUILDING
- EXISTING SEWER MANHOLE
- S EXISTING SEWER LINE
- EXISTING DRAIN MANHOLE
- D EXISTING DRAIN LINE
- EXISTING CATCH BASIN
- W EXISTING WATER LINE
- EXISTING HYDRANT
- A 105 EXISTING WETLAND FLAG
- EXISTING UTILITY POLE
- EXISTING WATER GATE
- EXISTING TREE

GRAPHIC SCALE

20 0 10 20 40 80

(IN FEET)
1 inch = 20 ft.

ZONING DESIGNATION:

ZONING DISTRICT: I–L

MINIMUM LOT AREA	40,000 SQ. FT.
MINIMUM LOT FRONTAGE	200'
FRONT YARD SETBACK	60'
MINIMUM SIDE YARD SETBACK	30'
MINIMUM REAR YARD SETBACK	50'
MAXIMUM BUILDING COVERAGE	25%
MAXIMUM BUILDING HEIGHT	35'

RI DEPARTMENT OF ENVIRONMENTAL MANAGEMENT
OFFICE OF WATER RESOURCES
FRESHWATER WETLANDS PROGRAM
APPROVED WITH CONDITIONS AS
SPECIFIED IN THE LETTER OF APPROVAL
DATED: NOV 2 9 2023 FILE #: 22-0049
NO CHANGES ALLOWED WITHOUT PRIOR APPROVAL
APPROVED PLANS MUST BE AT CONSTRUCTION SITE

RI DEPARTMENT OF ENVIRONMENTAL MANAGEMENT
OFFICE OF WATER RESOURCES
FRESHWATER WETLANDS PROGRAM

NOTE PER DEM:

Kindly be advised that this Permit is not equivalent to a verification of the type or extent of freshwater wetlands on site

OCT - 2 2023
Office of Water Resources

DRAWING ISSUE:

- ☐ CONCEPT
- ☐ CUSTOMER APPROVAL
- ☒ PERMITTING
- ☐ CONSTRUCTION
- ☐ AS–BUILT
- ☐ OTHER:

ONLY PLANS ISSUED FOR CONTRUCTION SHALL BE USED FOR CONSTRUCTION

OWNER/APPLICANT:
SPACE–PORT LLC
334 KNIGHT ST. STE. 11201
WARWICK, RI 02886

Thomas J. Principe, III
No. 2815
REGISTERED PROFESSIONAL ENGINEER

REVISIONS

No.	DATE	DRWN	CHKD
1.	05/25/23	KAB	TJP
2.	09/18/23	KAB	TJP

EXISTING CONDITIONS PLAN

PRINCIPE COMPANY, INC.
ENGINEERING DIVISION
27 SAKONNET RIDGE DRIVE
TIVERTON, RI 02878
401–265–1090
ESTABLISHED IN 1981

DEVELOPMENT PLAN REVIEW
for
#0 HIGH POINT AVENUE
AP 38, LOT 19
in
PORTSMOUTH, RHODE ISLAND

SCALE: 1"=20'		SHEET NO: 2 OF 7
DRAWN BY: KAB	DESIGN BY: KAB	CHECKED BY: TJP
DATE: 8/19/22		PROJECT NO.: LD–2022–09

c:\Users\admin\Principe Engineering Dropbox_Land Development\2022\LD-2022-9_0 High Point Avenue_Portsmouth_Exc Longsbore_Larry Phillips\Working Drawings and PDFs_2-2022-09_High Point Ave_Portsmouth DPR-REV09 823.dwg, DWG To PDF.pc3

STREET INDEX

HIGH POINT AVENUE
(PUBLIC– TOWN)

WEST MAIN ROAD
(PUBLIC– STATE HIGHWAY)

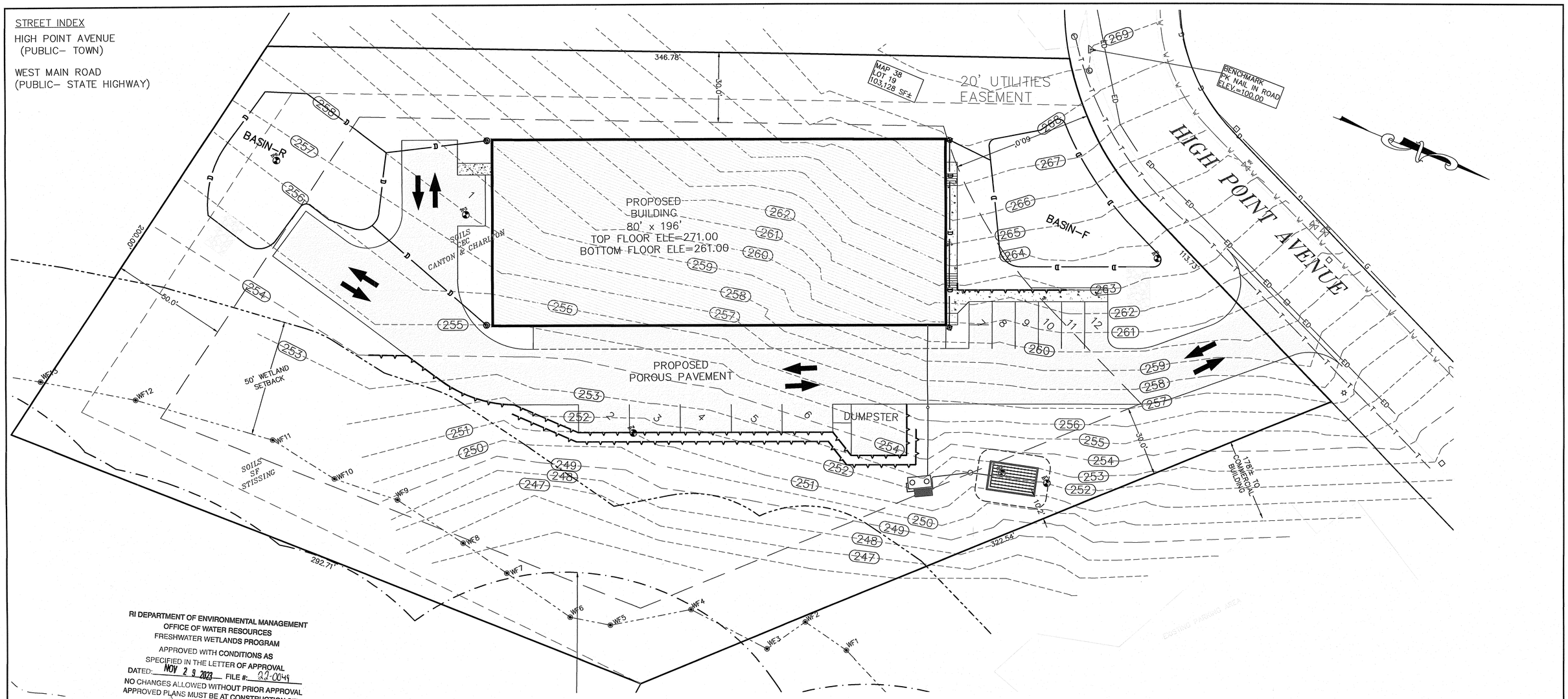

RI DEPARTMENT OF ENVIRONMENTAL MANAGEMENT
OFFICE OF WATER RESOURCES
FRESHWATER WETLANDS PROGRAM
APPROVED WITH CONDITIONS AS
SPECIFIED IN THE LETTER OF APPROVAL
DATED: NOV 29 2023 FILE #: 23-0049
NO CHANGES ALLOWED WITHOUT PRIOR APPROVAL
APPROVED PLANS MUST BE AT CONSTRUCTION SITE

Martha A. Venacek

RI Department of Environmental Management
OCT - 2 2023
Office of Water Resources

PARKING REQUIRED
WAREHOUSE – 0.75 SPACES / 1,000 GLA
15,680 S.F. REQUIRES 12 SPACES
TOTAL SPACES REQUIRED = 12 SPACES
TOTAL SPACES PROVIDED = 12 SPACES

GRAPHIC SCALE

20 0 10 20 40 80

(IN FEET)
1 inch = 20 ft.

LOT BUILDING COVERAGE NOTE:

1. PROPOSED LOT BUILDING COVERAGE IS 15,680 SF OF THE 103,237 SF TOTAL LOT AREA = 15.19%. (LESS THAN THE MAXIMUM 35% IN THE I–L ZONE).

ZONING DESIGNATION:

ZONING DISTRICT: I–L

MINIMUM LOT AREA	40,000 SQ. FT.
MINIMUM LOT FRONTAGE	200'
FRONT YARD SETBACK	60'
MINIMUM SIDE YARD SETBACK	30'
MINIMUM REAR YARD SETBACK	50'
MAXIMUM BUILDING COVERAGE	25%
MAXIMUM BUILDING HEIGHT	35'

LEGEND

- EXISTING STONE WALL
- 130 EXISTING CONTOUR LINE
- EXISTING EDGE OF WATER
- EXISTING TREE LINE
- EXISTING BUILDING
- S EXISTING SEWER MANHOLE
- S EXISTING SEWER LINE
- D EXISTING DRAIN MANHOLE
- D EXISTING DRAIN LINE
- EXISTING CATCH BASIN
- W EXISTING WATER LINE
- EXISTING HYDRANT
- A 105 EXISTING WETLAND FLAG
- EXISTING WATER GATE
- EXISTING BOULDER/ROCK
- EXISTING UTILITY POLE
- W PROPOSED WELL
- PROPOSED CATCH BASIN
- D PROPOSED DRAIN MANHOLE
- D PROPOSED STORM DRAIN
- W PROPOSED WATER MAIN
- PROPOSED RETAINING WALL
- PROPOSED WATER GATE
- × 123.4 PROPOSED FINISH GRADE
- ROOF DOWNSPOUT WITH 4"HDPE TO DRAIN STRUCTURE

DRAWING ISSUE:

- ☐ CONCEPT
- ☐ CUSTOMER APPROVAL
- ☒ PERMITTING
- ☐ CONSTRUCTION
- ☐ AS–BUILT
- ☐ OTHER:

ONLY PLANS ISSUED FOR CONTRUCTION SHALL BE USED FOR CONSTRUCTION

OWNER/APPLICANT:
SPACE–PORT LLC
334 KNIGHT ST. STE. 11201
WARWICK, RI 02886

Thomas J. Principe, III
No. 1575
REGISTERED PROFESSIONAL ENGINEER

REVISIONS

No.	DATE	DRWN	CHKD
1.	05/25/23	KAB	TJP
2.	09/18/23	KAB	TJP

SITE LAYOUT PLAN

PRINCIPE COMPANY, INC.
ENGINEERING DIVISION
27 SAKONNET RIDGE DRIVE
TIVERTON, RI 02878
401–265–1090
ESTABLISHED IN 1991

DEVELOPMENT PLAN REVIEW
for
#0 HIGH POINT AVENUE
AP 38, LOT 19
in
PORTSMOUTH, RHODE ISLAND

SCALE: 1"=20'	SHEET NO: 3 OF 7	
DRAWN BY: KAB	DESIGN BY: KAB	CHECKED BY: TJP
DATE: 8/19/22	PROJECT NO.: LD–2022–09	

C:\Users\admin\Principe Engineering Dropbox_Land Development\2022\LD-2022-9_0 High Point Avenue_Portsmouth_Evc_Longsbarc_Larry Phillips\Client Working Drawings and PDFs_2022-09_High Point Ave_Portsmouth JPR-REV09'823.dwg, DWG To PDF.pc3

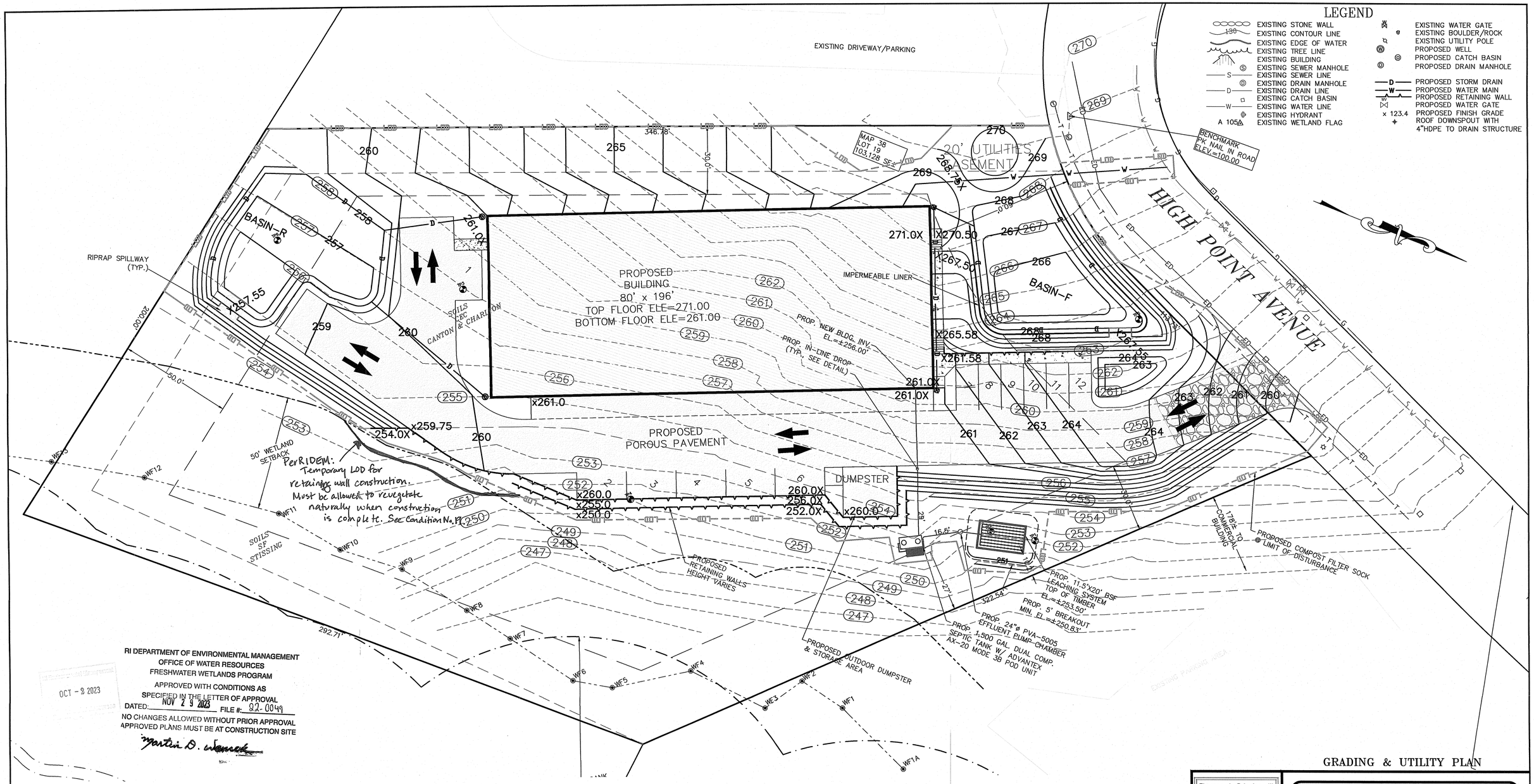

RI DEPARTMENT OF ENVIRONMENTAL MANAGEMENT
OFFICE OF WATER RESOURCES
FRESHWATER WETLANDS PROGRAM
APPROVED WITH CONDITIONS AS SPECIFIED IN THE LETTER OF APPROVAL
DATED: NOV 29 2023 FILE #: 22-0049
NO CHANGES ALLOWED WITHOUT PRIOR APPROVAL
APPROVED PLANS MUST BE AT CONSTRUCTION SITE
Martin D. Wenrick

OCT - 3 2023

RI DEPARTMENT OF ENVIRONMENTAL MANAGEMENT
OFFICE OF WATER RESOURCES
FRESHWATER WETLANDS PROGRAM
NOTE PER DEM:
Kindly be advised that this Permit is not equivalent to a verification of the type or extent of freshwater wetlands on site

GRAPHIC SCALE
20 0 10 20 40 80
(IN FEET)
1 inch = 20 ft.

PARKING REQUIRED
WAREHOUSE – 0.75 SPACES / 1,000 GLA
15,680 S.F. REQUIRES 12 SPACES
TOTAL SPACES REQUIRED = 12 SPACES
TOTAL SPACES PROVIDED = 12 SPACES

ZONING DESIGNATION:

ZONING DISTRICT: I-L	
MINIMUM LOT AREA	40,000 SQ. FT.
MINIMUM LOT FRONTAGE	200'
FRONT YARD SETBACK	60'
MINIMUM SIDE YARD SETBACK	30'
MINIMUM REAR YARD SETBACK	50'
MAXIMUM BUILDING COVERAGE	25%
MAXIMUM BUILDING HEIGHT	35'

DRAWING ISSUE:
- [ ] CONCEPT
- [x] CUSTOMER APPROVAL
- [ ] PERMITTING
- [ ] CONSTRUCTION
- [ ] AS-BUILT
- [ ] OTHER:

ONLY PLANS ISSUED FOR CONTRUCTION SHALL BE USED FOR CONSTRUCTION

OWNER/APPLICANT:
SPACE-PORT LLC
334 KNIGHT ST. STE. 11201
WARWICK, RI 02886

GRADING & UTILITY PLAN

Thomas J. Principe, III
No. 4166
REGISTERED PROFESSIONAL ENGINEER

PRINCIPE COMPANY, INC.
ENGINEERING DIVISION
27 SAKONNET RIDGE DRIVE
TIVERTON, RI 02878
401-265-1090
ESTABLISHED IN 1981

REVISIONS

No.	DATE	DRWN	CHKD
1.	05/25/23	KAB	TJP
2.	09/18/23	KAB	TJP

DEVELOPMENT PLAN REVIEW
for
#0 HIGH POINT AVENUE
AP 38, LOT 19
in
PORTSMOUTH, RHODE ISLAND

SCALE: 1"=20'	SHEET NO: 4 OF 7	
DRAWN BY: KAB	DESIGN BY: KAB	CHECKED BY: TJP
DATE: 04/27/23	PROJECT NO.: LD-2022-09	

C:\Users\admin\Principe Engineering Dropbox_Land Development\2022\LD-2022-9_0 High Point Avenue_Portsmouth_Eve_Longbarc_Larry Phillips\Client Working Drawings and PDFs\LD-2022-09_High Point Ave_Portsmouth DPR-RE/09-823.dwg, DWG To PDF.pc3

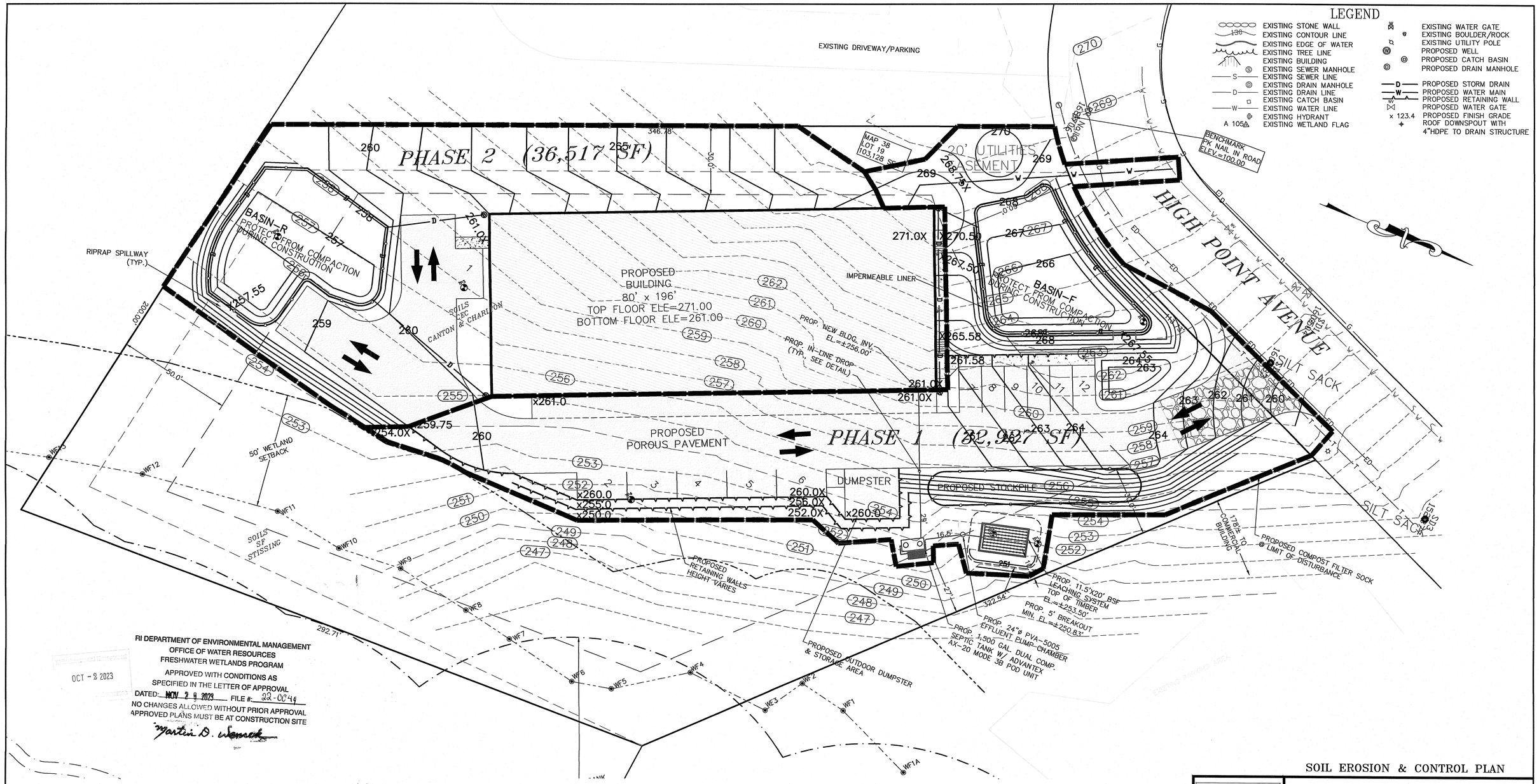

RI DEPARTMENT OF ENVIRONMENTAL MANAGEMENT
OFFICE OF WATER RESOURCES
FRESHWATER WETLANDS PROGRAM
APPROVED WITH CONDITIONS AS SPECIFIED IN THE LETTER OF APPROVAL
DATED: NOV 29 2023 FILE #: 22-0046
NO CHANGES ALLOWED WITHOUT PRIOR APPROVAL
APPROVED PLANS MUST BE AT CONSTRUCTION SITE
Martin D. Wenock

OCT - 2 2023

GRAPHIC SCALE

20 0 10 20 40 80

(IN FEET)
1 inch = 20 ft.

PARKING REQUIRED
WAREHOUSE – 0.75 SPACES / 1,000 GLA
15,680 S.F. REQUIRES 12 SPACES
TOTAL SPACES REQUIRED = 12 SPACES
TOTAL SPACES PROVIDED = 12 SPACES

ZONING DESIGNATION:

ZONING DISTRICT: I–L	
MINIMUM LOT AREA	40,000 SQ. FT.
MINIMUM LOT FRONTAGE	200'
FRONT YARD SETBACK	60'
MINIMUM SIDE YARD SETBACK	30'
MINIMUM REAR YARD SETBACK	50'
MAXIMUM BUILDING COVERAGE	25%
MAXIMUM BUILDING HEIGHT	35'

DRAWING ISSUE:
- ☐ CONCEPT
- ☒ CUSTOMER APPROVAL
- ☐ PERMITTING
- ☐ CONSTRUCTION
- ☐ AS–BUILT
- ☐ OTHER:

ONLY PLANS ISSUED FOR CONTRUCTION SHALL BE USED FOR CONSTRUCTION

OWNER/APPLICANT:
SPACE–PORT LLC
334 KNIGHT ST. STE. 11201
WARWICK, RI 02886

SOIL EROSION & CONTROL PLAN

Thomas J. Principe, III
No. 4580
REGISTERED PROFESSIONAL ENGINEER

REVISIONS

No.	DATE	DRWN	CHKD
1.	05/25/23	KAB	TJP
2.	09/18/23	KAB	TJP

PRINCIPE COMPANY, INC.
ENGINEERING DIVISION
27 SAKONNET RIDGE DRIVE
TIVERTON, RI 02878
401–265–1090
ESTABLISHED IN 1981

DEVELOPMENT PLAN REVIEW
for
#0 HIGH POINT AVENUE
AP 38, LOT 19
in
PORTSMOUTH, RHODE ISLAND

SCALE: 1"=20'		SHEET NO: 5 OF 7
DRAWN BY: KAB	DESIGN BY: KAB	CHECKED BY: TJP
DATE: 04/27/23		PROJECT NO.: LD–2022–09

C:\Users\admin\Principe Engineering Dropbox_Land Development\2022\LD-2022-9_0 High Point Avenue_Portsmouth_Evc_Longbaro_Larry Phillips\Current Working Drawings and PDFs_2022-09_High Point Ave_Portsmouth_PR-RE\09823.dwg, DWG To PDF.pc3

VEGETATIVE COVER AND PLANTING

1. THE NORMAL ACCEPTABLE SEASONABLE SEEDING DATES ARE APRIL 1ST THROUGH OCTOBER 15TH.

2. TOP SOIL FOR PERMANENT OR LONG TERM TEMPORARY SEEDING SHOULD HAVE A SANDY LOAM TEXTURE, RELATIVELY FREE OF SUBSOIL MATERIAL, STONES, ROOTS, LUMPS OF SOIL, TREE LIMBS, TRASH OR CONSTRUCTION DEBRIS. TOP SOIL SHALL CONFORM WITH MASSACHUSETTS SPECIFICATIONS.

3. THE DESIGN SEED MIX UTILIZED IN ALL DISTURBED AREAS TO BE SEEDED SHALL BE COMPRISED OF THE FOLLOWING:

TYPE	% BY WEIGHT	SEEDING DATE
CREEPING RED FESCUE	70	
ASTORIA BENTGRASS	5	APRIL 1 – JUNE 15
BIRDFOOT TREFOIL	15	AUGUST 15 – OCTOBER 15
PERENNIAL RYE GRASS	10	

APPLICATION RATE – 100 LBS PER ACRE

SEED MIX SHALL BE INOCULATED WITHIN 24 – HOURS BEFORE MIXING AND PLANTING, WITH APPROPRIATE INOCULATION FOR EACH SEED VARIETY. ALTERNATE SEED TYPES DUE TO SITE SPECIFIC CONDITIONS AND SOILS ARE ACCEPTABLE WITH THE ENGINEER'S APPROVAL.

4. IN TOPSOIL SEEDING AREAS, THE CONTRACTOR WILL LIME AND FERTILIZE AS REQUIRED TO COMPLIMENT OR UPGRADE SOIL CONDITIONS.

5. THE CONTRACTOR MUST REPAIR AND/OR RESEED ANY PERMANENT VEGETATIVE COVER AREAS THAT DO NOT DEVELOP OR WHICH ERODE WITHIN A ONE (1) YEAR PERIOD.

EROSION CONTROL, SOIL STABILIZATION AND SEDIMENT CONTROL PLAN

1. PRIOR TO THE COMMENCEMENT OF ANY CLEARING, GRUBBING, DEMOLITION OR EARTHWORK ACTIVITY, TEMPORARY EROSION AND SEDIMENT CONTROL MEASURES AS INDICATED ON THE PLANS ARE TO BE INSTALLED BY THE CONTRACTOR.

2. CONSTRUCTION ACCESS STABILIZATION ENTRANCE PADS ARE TO BE INSTALLED PRIOR TO THE COMMENCEMENT OF SITE GRUBBING OR EARTHWORK ACTIVITY.

3. EXISTING CATCH BASINS ARE TO BE PROTECTED WITH STRAW BALES AND/OR SILT SACS PRIOR TO THE START OF SITE GRUBBING, EARTHWORK OR UNDERGROUND UTILITY AND DRAINAGE INFRASTRUCTURE INSTALLATION TO SERVE THE DEVELOPMENT SITE.

4. THE PROJECT CONSTRUCTION SEQUENCE, TO THE EXTENT PRACTICAL, SHOULD REQUIRE THE INSTALLATION OF DOWN GRADE AND OFF SITE STORM DRAINAGE SYSTEM IMPROVEMENTS BEFORE THE START OF SITE GRUBBING AND EARTHWORK ACTIVITY.

5. TEMPORARY SITE SLOPE TREATMENTS FOR SOIL STABILIZATION SHALL CONSIST OF STRAW, FIBER MULCH, RIP RAP OR PROTECTIVE COVERS SUCH AS MAT OR FIBER LINING (BURLAP, JUTE, FIBERGLASS NETTING, AND EXCELSIOR OR EQUAL PRODUCTS). THESE AND OTHER ACCEPTABLE MEASURES SHALL BE INCORPORATED INTO THE SITE WORK AS WARRANTED OR AS ORDERED BY THE ENGINEER.

6. CONSTRUCTION SITES ARE DYNAMIC, THE CONTRACTOR IS RESPONSIBLE FOR THE INSTALLATION AND OR MOVEMENT AND MAINTENANCE OF EROSION CONTROLS, SOIL STABILIZATION AND SEDIMENT CONTROL MEASURES AS NEEDED TO MAXIMIZE THE INTENT OF THE PLAN FOR ALL SITE CONDITIONS THROUGHOUT THE CONSTRUCTION PERIOD.

7. THE CONTRACTOR SHALL BE RESPONSIBLE FOR PERIODIC INSPECTION, MAINTENANCE, REPAIR, AND REPLACEMENT OF EROSION CONTROLS, SOIL STABILIZATION AND SEDIMENT CONTROL DEVICES UNTIL AN ACCEPTABLE PERMANENT VEGETATIVE GROWTH IS ESTABLISHED. THE CONTRACTOR SHALL MAINTAIN A DETAIL LOG OF ALL EROSION CONTROL INSPECTIONS, COMPLAINTS RELATED TO EROSION OR SEDIMENT, AND CORRECTIVE REMEDIAL MEASURES TAKEN THROUGHOUT THE COURSE OF THE PROJECT CONSTRUCTION.

8. SOIL EROSION AND SEDIMENT CONTROL IS NOT LIMITED TO DAMAGES CAUSED BY WATER BUT ALSO INCLUDES EROSION AND SEDIMENT RESULTING FROM WINDS. MEASURES, SUCH AS TEMPORARY GROUND COVERS, WATER AND CALCIUM APPLICATIONS ARE TO BE UNDERTAKEN AS NEEDED TO MINIMIZE WIND RELATED SOIL AND DUST CONTROL.

9. STOCK PILES OF EARTH MATERIALS SHALL NOT BE LOCATED NEAR WATERWAYS OR WETLANDS. STOCK PILES SHALL HAVE SIDE SLOPES NO GREATER THAN THIRTY PERCENT (30%). STOCK PILES SHALL BE SURROUNDED ON THE DOWN GRADIENT OF THE EXISTING GROUND SURFACE BY HAY BALES OR SILT FENCE. THE STOCK PILES SHALL ALSO BE SEEDED OR STABILIZED IN SOME MANOR TO PREVENT SOIL EROSION.

10. THE SMALLEST POSSIBLE SITE AREAS SHALL BE DISTURBED OR EXPOSED AT ONE TIME AND DENUDED SLOPES OR WORK AREAS SHALL NOT BE LEFT EXPOSED FOR EXCESSIVE PERIODS OF TIME, SUCH AS INACTIVE PERIODS OR SITE WORK SHUT DOWNS.

11. TO THE EXTENT POSSIBLE, ALL DISTURBED AREAS MUST BE SEEDED OR STABILIZED WITHIN THE CONSTRUCTION SEASON. STABILIZATION OF ONE FORM OR ANOTHER SHALL BE ACHIEVED WITHIN FIFTEEN (15) DAYS OF FINAL GRADING.

12. EXPOSED STEEP OR LONG SLOPES SHOULD BE TREATED WITH "CRIMPING" OR "TRACKING" TO REDUCE EROSION AND SEDIMENT AND TO TACK DOWN SEEDING OR MULCH APPLICATIONS.

13. IF CONCRETE IS TO BE USED ON SITE, THE CONTRACTOR MUST ESTABLISH AND MAINTAIN SPECIFIC WASHOUT AREAS FOR THE CONCRETE TRUCKS WITH APPROPRIATE PROTECTION CONTROLS.

14. THE CONTRACTOR IS RESPONSIBLE FOR PROVIDING AND MAINTAINING COLLECTION AND STORAGE LOCATIONS ON-SITE FOR ALL CONSTRUCTION DEBRIS AND TRASH SO THAT THIS MATERIAL DOES NOT BECOME A NEIGHBORHOOD NUISANCE.

15. EXISTING TREES AND VEGETATION WILL BE RETAINED WHENEVER FEASIBLE.

16. SITE SOIL EROSION AND SOIL STABILIZATION AND SEDIMENT CONTROLS MUST CONFORM TO ALL REQUIREMENTS OF THE APPLICABLE LOCAL COMMUNITY ORDINANCES AND STATE REGULATIONS.

RI DEPARTMENT OF ENVIRONMENTAL MANAGEMENT
OFFICE OF WATER RESOURCES
FRESHWATER WETLANDS PROGRAM
APPROVED WITH CONDITIONS AS
SPECIFIED IN THE LETTER OF APPROVAL
DATED: NOV 2 9 2023 FILE #: 22-0049
NO CHANGES ALLOWED WITHOUT PRIOR APPROVAL
APPROVED PLANS MUST BE AT CONSTRUCTION SITE

OCT – 2 2023

ORDER OF PROCEDURE:

PRIOR TO ANY CLEARING AND GRUBBING OR ANY ROUGH GRADING, TEMPORARY STRAW BALES AND SANDBAGS SHALL BE PLACED OUTSIDE THE LIMITS OF CONSTRUCTION AS PER THE PLANS (I.E. ALONG ROADWAYS, STREAM BANKS, CRITICAL AREAS, ETC.).

ALL EROSION AND SEDIMENTATION CONTROL STRUCTURES SHALL BE PERIODICALLY MAINTAINED AS PER THE RESPECTIVE PROGRAMS FOR TEMPORARY CONTROL.

IF WORK PROGRESS IS TO BE INTERRUPTED AT ANY TIME, REFERENCE EROSION AND SEDIMENTATION PROGRAMS FOR TEMPORARY CONTROL.

TEMPORARY STRAW BALES AND SANDBAGS ALONG AND AT THE ENDS OF ROADWAYS MAY ALSO BE REMOVED AFTER FINAL SOIL STABILIZATION HAS BEEN ACHIEVED AND APPROVED.

STRAW BALES LOCATED AT DRAINAGE OUTLETS MUST REMAIN UNTIL SUCH TIME THAT A DESIRABLE STAND OF GRASS OR COVER HAS BEEN ESTABLISHED AND THE PROJECT RECEIVES A FAVORABLE APPROVAL FOR FINAL ACCEPTANCE FROM THE ENGINEER.

SEDIMENTATION CONTROL PROGRAM:

RIP RAP SPLASH PADS SHALL BE INSTALLED AT THE OUTLETS FOR ALL CULVERTS DISCHARGING INTO A WATERWAY.

EXTREME CARE SHALL BE EXERCISED SO AS TO PREVENT ANY UNSUITABLE MATERIAL ENTERING THE WETLANDS.

ALL DISTURBED AREAS SUBJECT TO EROSIVE TENDENCIES WHETHER THEY BE NEWLY FILLED OR EXCAVATED SHALL BE SEEDED AND PROTECTED WITH A FIBER MULCH.

DURING CONSTRUCTION, THE CONTRACTOR AND/OR DEVELOPER SHALL BE RESPONSIBLE FOR MAINTAINING DRAINAGE AND RUNOFF FLOW DURING STORMS AND PERIODS OF RAINFALL.

SEDIMENTATION CONTROL DEVICES SHALL BE INSPECTED CLOSELY AND MAINTAINED PROMPTLY AFTER EACH RAINFALL.

CARE SHOULD BE TAKEN SO AS NOT TO PLACE "REMOVED SEDIMENTS" WITHIN THE PATH OF EXISTING, NEWLY CREATED (BOTH TEMPORARY AND PERMANENT) OR PROPOSED WATERCOURSES OR THOSE AREAS SUBJECTED TO STORM WATER FLOW.

ADDITIONAL STRAW BALES OR SANDBAGS SHALL BE LOCATED AS CONDITIONS WARRANT.

ALL SEDIMENTS SHALL BE REMOVED FROM THE DRAINAGE AND DETENTION FACILITIES AS SCHEDULED FOR EACH FACILITY (SEE DETENTION BASIN MAINTENANCE, THIS SHEET).

GENERAL NOTES:

1. IT SHALL BE THE CONTRACTOR'S SOLE RESPONSIBILITY TO FAMILIARIZE HIMSELF WITH ANY APPLICABLE LOCAL, STATE AND FEDERAL LAWS GOVERNING HIS INTENDED ACTIVITIES. OSHA REGULATIONS ARE APPLICABLE OF PROJECT SITE CONSTRUCTION ACTIVITIES.

2. ALL CONSTRUCTION WILL BE UNDERTAKEN IN ACCORDANCE WITH THE APPLICABLE REQUIREMENTS OF THE TOWN OF PORTSMOUTH.

3. IT SHALL BE THE CONTRACTOR'S SOLE RESPONSIBILITY TO MAINTAIN THE INTEGRITY OF ALL EXISTING UTILITIES, STRUCTURES, AND ABUTTING PROPERTIES. THE COST OF ANY REPAIR OR REPLACEMENT OF DAMAGED ITEMS SHALL BE BORNE BY THE CONTRACTOR.

4. IF THE MUNICIPALITY REQUIRES A PROJECT PRE-CONSTRUCTION CONFERENCE, THE PROJECT DEVELOPER AND THE PROJECT CONTRACTOR WILL ATTEND AND WILL PROVIDE ALL REQUESTED MATERIALS PRIOR TO COMMENCING ANY WORK.

5. IF CEMENT CONCRETE MIX TRUCKS ARE TO BE WASHED OUT ON SITE, THE CONTRACTOR IS RESPONSIBLE FOR ESTABLISHING AND MAINTAINING A WASH OUT AREA WITH APPROPRIATE PROTECTION CONTROLS.

6. THE CONTRACTOR IS RESPONSIBLE FOR PROVIDING AND MAINTAINING COLLECTION AND STORAGE LOCATIONS ON-SITE FOR ALL CONSTRUCTION DEBRIS AND TRASH SO THAT THIS MATERIAL DOES NOT BECOME A NEIGHBORHOOD NUISANCE.

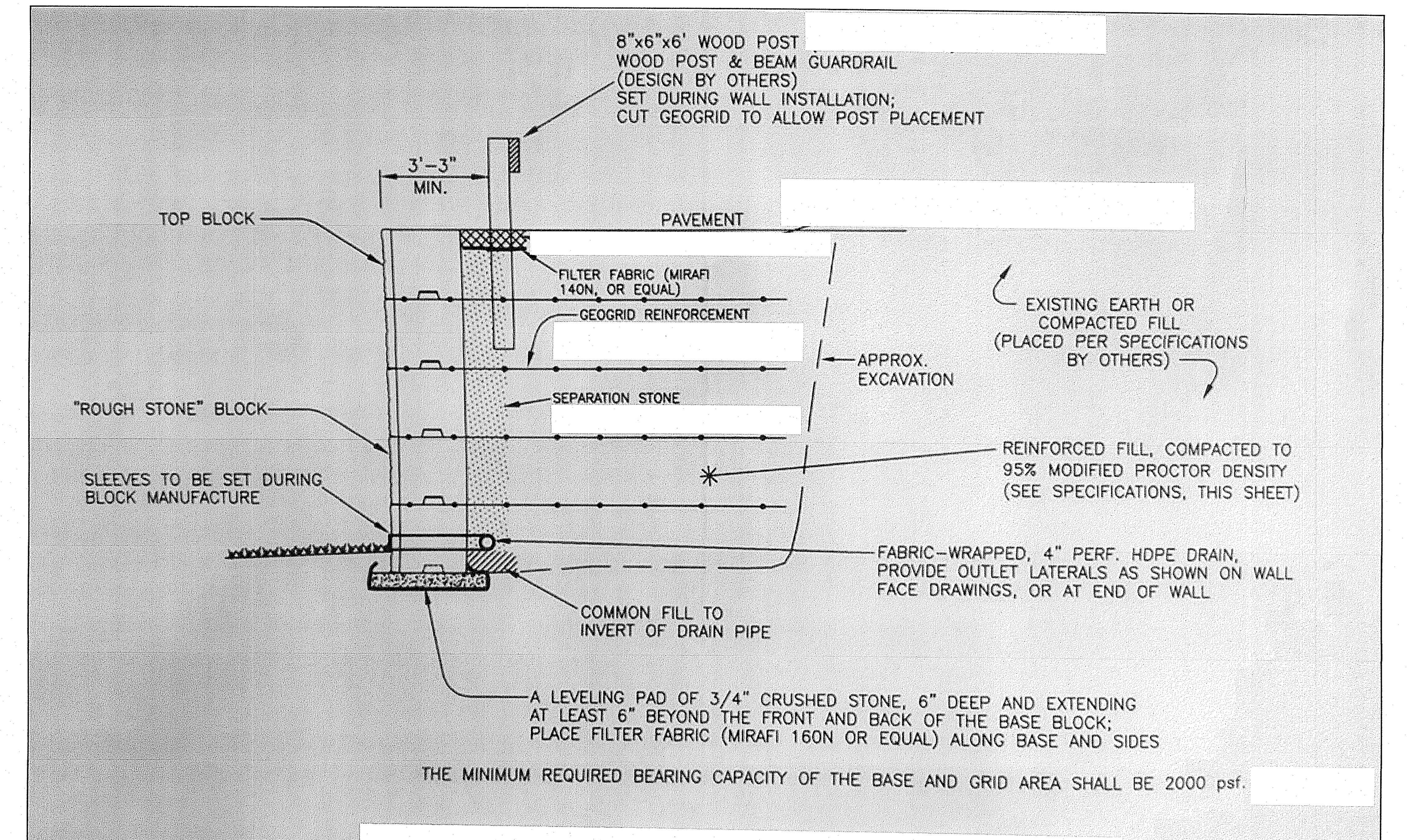

RETAINING WALL SECTION

"ROUGH STONE" RETAINING WALL BY CONIGLIARO BLOCK
(NOT TO SCALE)

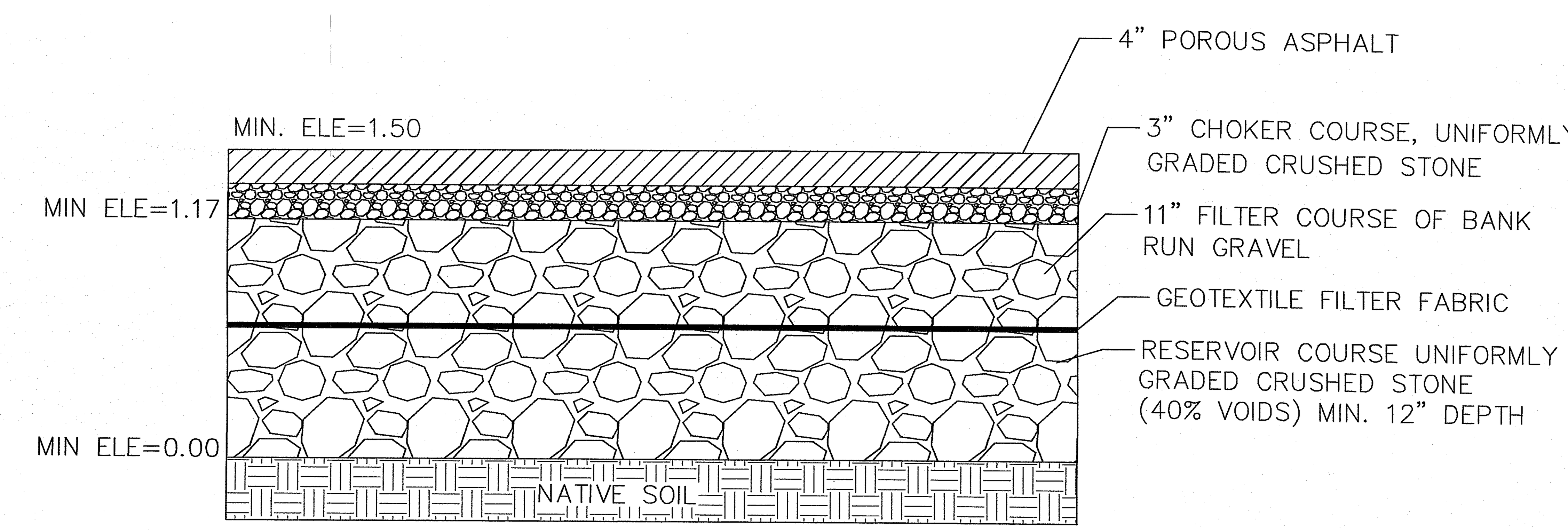

POROUS PAVEMENT DETAIL
NOT TO SCALE

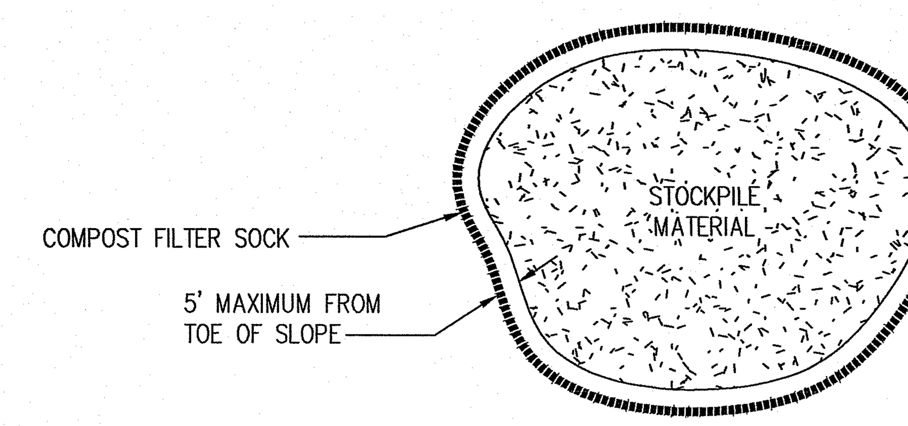

STOCKPILE DETAIL NOT TO SCALE

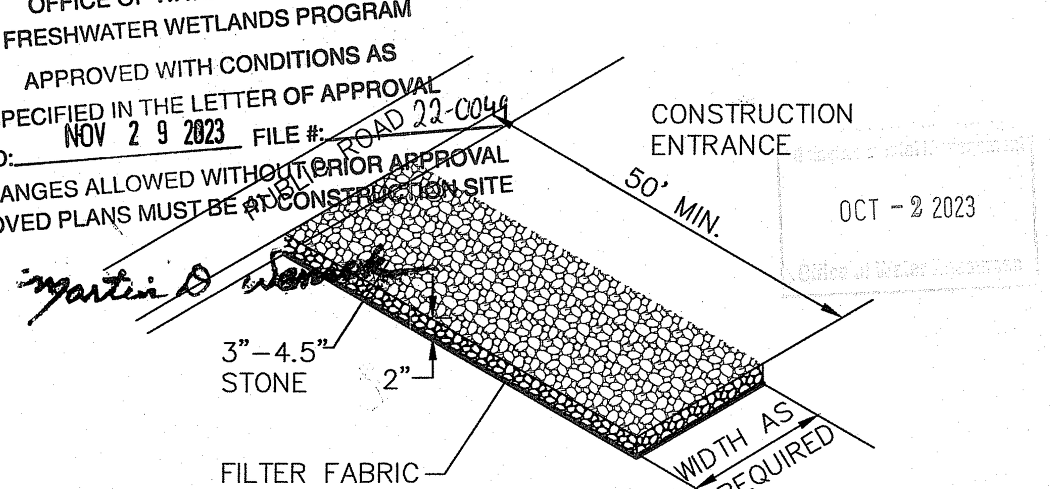

MATERIALS SIZE			
SQUARE MESH SIEVES	2"CRUSHED STONE OR GRAVEL	ASTM C-33 NO. 2	ASTM C-33 NO. 3
	% FINER	% FINER	% FINER
2-1/2 INCHES	100	90-100	100
2 INCHES	95-100	35-70	90-100
1-1/2 INCHES	30-55	0-15	35-70
1-1/4 INCHES	0-25	–	–
1 INCH	0-5	–	0-15
3/4 INCH	–	0-5	–
1/2 INCH	–	–	0-5
3/8 INCH	–	–	–

RIP-RAP STABILIZATION PAD @
CONSTRUCTION ENTRANCE
NOT TO SCALE

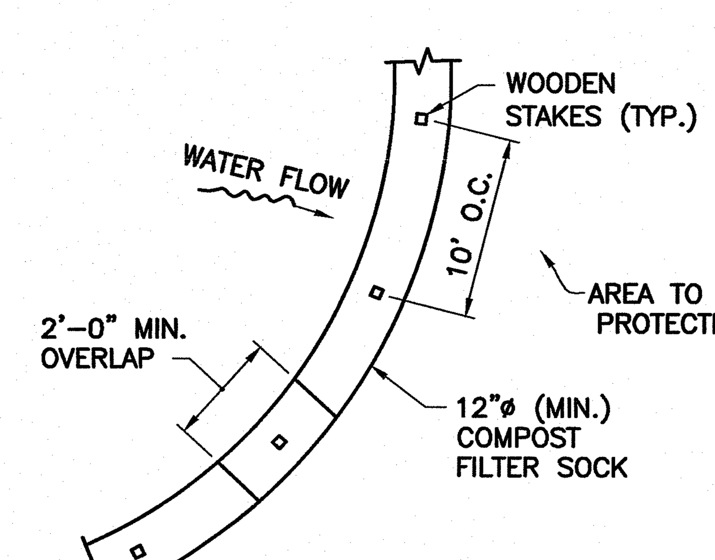

PLAN

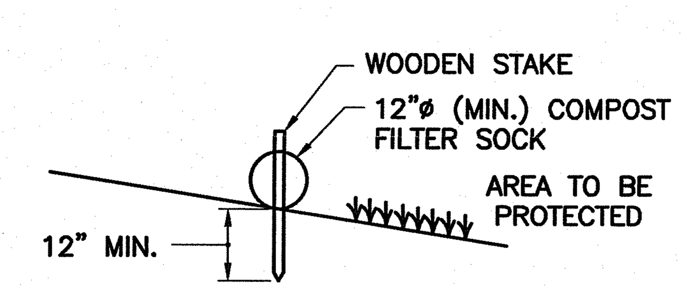

SECTION

NOTES:
1. ALL MATERIAL TO MEET REQUIREMENTS OF SECTION 206 OF RI STANDARD SPECIFICATIONS.
2. COMPOST MATERIAL MUST BE ACCEPTED BY THE ENGINEER PRIOR TO PLACEMENT.

COMPOST FILTER SOCK

PERIMETER EROSION CONTROLS
NOT TO SCALE

DRAWING ISSUE:
- ☐ CONCEPT
- ☐ CUSTOMER APPROVAL
- ☒ PERMITTING
- ☐ CONSTRUCTION
- ☐ AS-BUILT
- ☐ OTHER:

ONLY PLANS ISSUED FOR CONTRUCTION SHALL BE USED FOR CONSTRUCTION

OWNER/APPLICANT:
SPACE-PORT LLC
334 KNIGHT ST. STE. 11201
WARWICK, RI 02886

DETAILS 1

Thomas J. Principe, III
REGISTERED PROFESSIONAL ENGINEER

REVISIONS

No.	DATE	DRWN	CHKD
1.	05/25/23	KAB	TJP
2.	09/18/23	KAB	TJP

PRINCIPE COMPANY, INC.
ENGINEERING DIVISION
27 SAKONNET RIDGE DRIVE
TIVERTON, RI 02878
401-265-1090
ESTABLISHED IN 1981

DEVELOPMENT PLAN REVIEW
for
#0 HIGH POINT AVENUE
AP 38, LOT 19
in
PORTSMOUTH, RHODE ISLAND

SCALE: AS NOTED		SHEET NO: 6 OF 7
DRAWN BY: KAB	DESIGN BY: KAB	CHECKED BY: TJP
DATE: 8/19/22		PROJECT NO.: LD-2022-09

DRAWING ISSUE:

- ☐ CONCEPT
- ☐ CUSTOMER APPROVAL
- ☒ PERMITTING
- ☐ CONSTRUCTION
- ☐ AS-BUILT
- ☐ OTHER:

ONLY PLANS ISSUED FOR CONTRUCTION SHALL BE USED FOR CONSTRUCTION

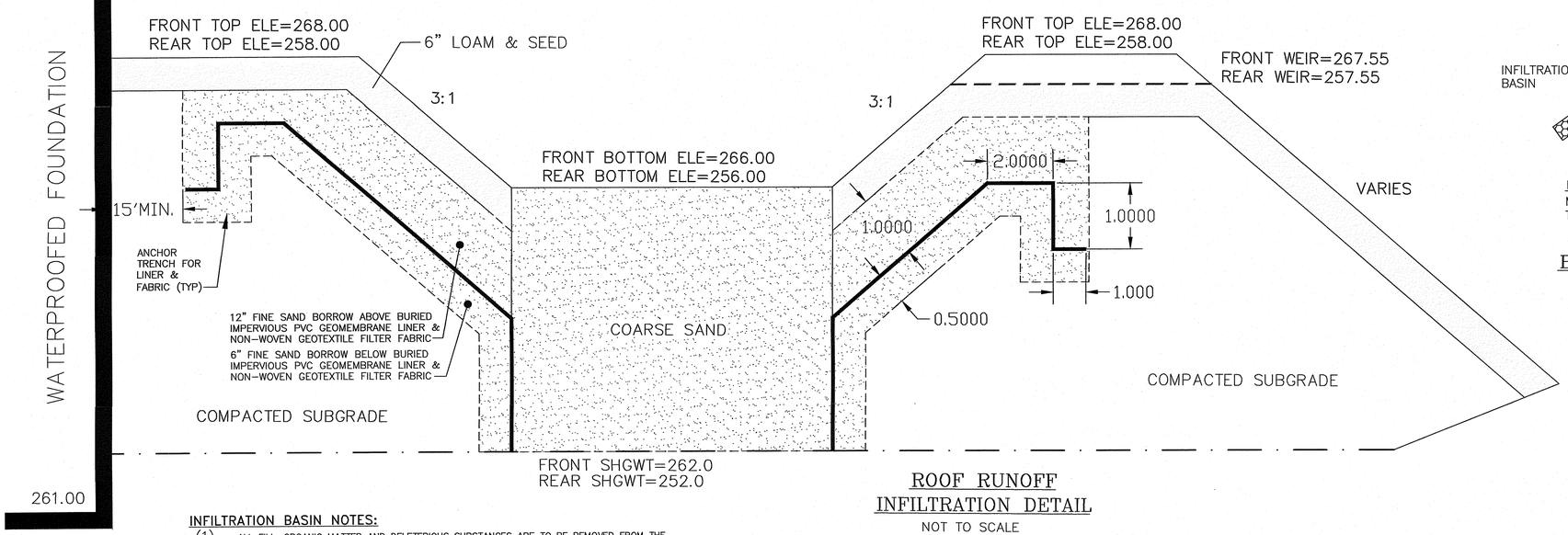

ROOF RUNOFF INFILTRATION DETAIL

NOT TO SCALE

INFILTRATION BASIN NOTES:

(1) ALL FILL, ORGANIC MATTER AND DELETERIOUS SUBSTANCES ARE TO BE REMOVED FROM THE PROPOSED INFILTRATION BASIN AND REPLACED WITH COARSE SAND AS SHOWN ABOVE.

(2) ONLY FRONT BASIN REQUIRES IMPERVIOUS LINER PER THE ABOVE.

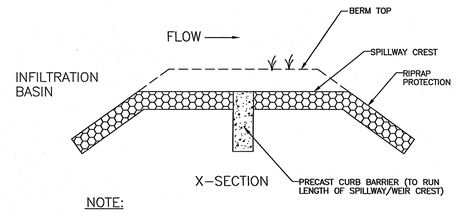

NOTE:
MULTIPLE CURB SECTIONS MAY BE NECESSARY TO SPAN WEIR WIDTH.

BASIN OUTLET OVERFLOW CURB DETAIL

NOT TO SCALE

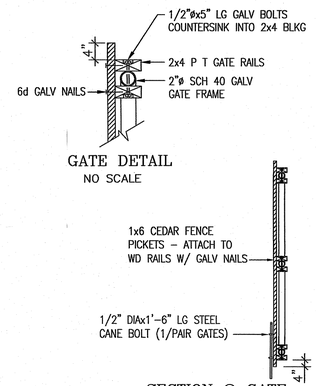

GATE DETAIL
NO SCALE

SECTION @ GATE
NO SCALE

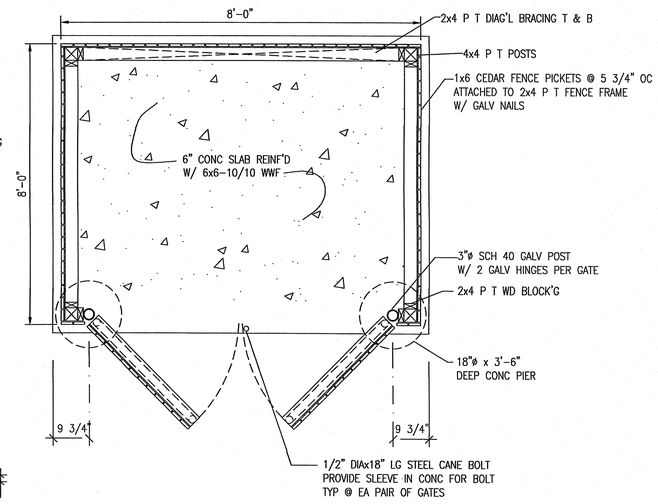

TRASH ENCLOSURE PLAN

NO SCALE

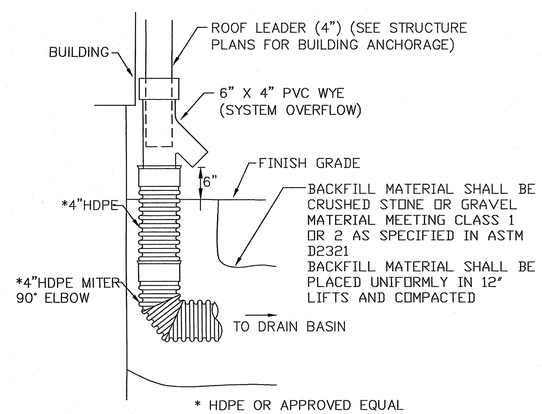

* HDPE OR APPROVED EQUAL

ROOF LEADER COLLECTOR DETAIL

NOT TO SCALE

OWNER/APPLICANT:
SPACE-PORT LLC
334 KNIGHT ST. STE. 11201
WARWICK, RI 02886

DETAILS 2

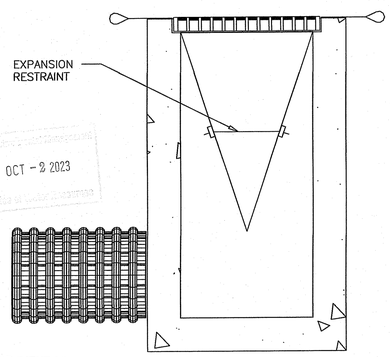

RECEIVED
OCT - 2 2023
OFFICE OF WATER RESOURCES

RI DEPARTMENT OF ENVIRONMENTAL MANAGEMENT
OFFICE OF WATER RESOURCES
FRESHWATER WETLANDS PROGRAM
APPROVED WITH CONDITIONS AS
SPECIFIED IN THE LETTER OF APPROVAL
NOV 2 9 2023 FILE #: 22-0049
Comments: Nemeck

INSTALLATION DETAIL

DETAIL OF INLET SEDIMENT CONTROL DEVICE

PROJECT:		
CITY:		DR. BY:
STATE:	DATE:	DR. NO:

SILTSACK®
SPECIFICATIONS

NOTE: THE SILTSACK® WILL BE MANUFACTURED FROM A WOVEN POLYPROPYLENE FABRIC THAT MEETS OR EXCEEDS THE FOLLOWING SPECIFICATIONS.

STANDARD SILTSACK®
(FOR AREAS OF LOW TO MODERATE PRECIPITATION AND RUN-OFF)

PROPERTIES	TEST METHOD	UNITS	
GRAB TENSILE STRENGTH	ASTM D-4632		300 LBS
GRAB TENSILE ELONGATION	ASTM D-4632		20 %
PUNCTURE	ASTM D-4833		120 LBS
MULLEN BURST	ASTM D-3786		800 PSI
TRAPEZOID TEAR	ASTM D-4533		120 LBS
UV RESISTANCE	ASTM D-4355		80 %
APPARENT OPENING SIZE	ASTM D-4751		40 US SIEVE
FLOW RATE	ASTM D-4491		40 GAL/MIN/SQ FT
PERMITTIVITY	ASTM D-4491		0.55 SEC -1

HEAVY DUTY SILTSACK®
(FOR AREAS OF MODERATE TO HEAVY PRECIPITATION AND RUN-OFF)

PROPERTIES	TEST METHOD	UNITS	
GRAB TENSILE STRENGTH	ASTM D-4632		265 LBS
GRAB TENSILE ELONGATION	ASTM D-4632		20 %
PUNCTURE	ASTM D-4833		135 LBS
MULLEN BURST	ASTM D-3786		420 PSI
TRAPEZOID TEAR	ASTM D-4533		45 LBS
UV RESISTANCE	ASTM D-4355		90 %
APPARENT OPENING SIZE	ASTM D-4751		20 US SIEVE
FLOW RATE	ASTM D-4491		200 GAL/MIN/SQ FT
PERMITTIVITY	ASTM D-4491		1.5 SEC -1

OIL ABSORBANT SILTSACK®
(FOR AREAS WHERE THERE IS A CONCERN FOR OIL RUN-OFF OR SPILLS)

DEPENDING ON YOUR PARTICULAR APPLICATION, THE SILTSACK® CAN BE MADE FROM EITHER ONE OF THE ABOVE FABRICS WITH AN OIL-ABSORBANT PILLOW INSERT OR, MADE COMPLETELY FROM AN OIL-ABSORBANT SILTSACK® WITH A WOVEN PILLOW INSERT.

Thomas J. Principe, III
No. 2[illegible]
REGISTERED PROFESSIONAL ENGINEER

PRINCIPE COMPANY, INC.
ENGINEERING DIVISION
27 SAKONNET RIDGE DRIVE
TIVERTON, RI 02878
401-265-1090
ESTABLISHED IN 1981

REVISIONS

No.	DATE	DRWN	CHKD
1.	05/25/23	KAB	TJP
2.	09/18/23	KAB	TJP

DEVELOPMENT PLAN REVIEW
for
#0 HIGH POINT AVENUE
AP 38, LOT 19
in
PORTSMOUTH, RHODE ISLAND

SCALE: AS NOTED		SHEET NO: 7 OF 7
DRAWN BY: KAB	DESIGN BY: KAB	CHECKED BY: TJP
DATE: 8/19/22		PROJECT NO.: LD-2022-09

C:\Users\admin\Principe Engineering Dropbox_Land Development\2022\LL-2022-9_0 High Point Avenue_Portsmouth_Exc_Dropbox_Larry Phillips\Client Working Drawings and PDFs_3-2022-09_High Point Ave_Portsmouth DPR-RE\09'623.dwg, DWG To PDF.pc3